RICEMASTER

NSF & ETL Listed: RM-55N-R Natural Gas/RM-55P-R Propane Gas
Non-Certified: RM-50N-R Natural Gas/RM-50P-R Propane Gas

Automatic Gas Rice Cooker

OWNER'S MANUAL

SECTION I: Installation Instructions

FOR YOUR SAFETY

Do not store or use gasoline or other flammable vapors and liquids in the vicinity of this or any other appliance.

TO THE PURCHASER

Contact your local gas supplier and ask instructions in the event the user smells gas. This information should be posted in a prominent location.

WARNING

Improper installation, adjustment, alteration, service or maintenance can cause property damage, injury or death. Read the Installation, Operating and Maintenance Instructions thoroughly before installing or servicing this equipment.

THE INSTALLER MUST LEAVE THIS MANUAL WITH THE UNIT AFTER INSTALLATION.

THE CONSUMER IS TO RETAIN THIS MANUAL FOR FUTURE REFERENCE.

Congratulations on your purchase of your RiceMaster Automatic Gas Rice Cooker. With proper installation, care and use, it should provide years of reliable service.

IMPORTANT NOTE: The RM-50 is not NSF or ETL listed. However, its function and most specifications are identical to the RM-55. RM-55 parts are interchangeable with RM-50. Except for listings and certification, information in this manual for the RM-55 is the same as the RM-50.

COMPONENT IDENTIFICATION

SPECIFICATIONS

Specifications:	RM-55N-R	RM-55P-R
Type of gas	Natural	Propane
Btu	34,600	27,300
Gas connection	3/4” NPT	3/4” NPT
Liquid capacity	24 qts.	24 qts.
Unit size	17”h x 19”d x 23”	17”h x 19”d x 23”
Net weight	47 lbs	47 lbs
Carton size	21” x 21” x 17”	21” x 21” x 17”
Master Carton	1 unit (4.4 cu. ft.)	1 unit (4.4 cu. ft.)
Shipping weight	50 lbs	50 lbs
Color	white jacket/gray base	white jacket/gray base

Color	RM-50N-R	RM-50P-R
	white jacket/red base	white jacket/red base

Capacity:

Raw Rice	17 lbs. (55 - 6 oz. cups)
Cooked Rice	270 servings @ 3 oz. each

INSTALLATION:

1. The gas supply line must be of adequate size to insure maximum efficiency of the unit.
2. The installation must conform with the National Fuel Gas Code, ANSI Z223.1, Natural Gas Installation Code, CAN/CGA-B149.1 or the Propane Installation Code, CAN/CGA-B149.2, as applicable including:
    a. The appliance and its individual shutoff valve must be disconnected from the gas supply piping system during any pressure testing of that system at test pressure in excess of 1/2 NPT (3.45 kPa).
    b. The appliance must be isolated from the gas supply piping system by closing its individual manual valve during any pressure testing of the gas supply piping system at test pressures equal or less than 1/2 psig (3.45 kPa).
3. Local regulations governing gas appliance installations must be complied with.
4. Equipment should be in an area with adequate ventilation.
5. Minimum spacing of 6” to combustible construction is required along back and side walls. Clearance for non combustible construction are the same as combustible clearances. For use only on noncombustible floors.
6. Materials such as wood, compressed paper and plant fibers that will ignite and burn, **must not be exposed near this unit**. Local safety codes should be complied with in respect to fire hazard avoidance.
7. **Use of the supplied pressure regulator is mandatory**. Note: use of two regulators may cause insufficient gas flow. Consult with your installer but always comply with above codes.
8. Keep the appliance area free and clear from combustible materials, gasoline and other flammable vapors and liquids.
9. Locate this appliance in a well ventilated place. **Do not block or cover the opening between the shroud and pot. Do not obstruct flow of combustion and ventilation air.**
10. This unit must be installed with adequate clearance for servicing and proper operation.
11. This unit should be operated only with drip pan in place.
12. If the unit is connected to a flexible gas line, the installation shall be made with a connector that complies with the Standard Connectors for Movable Gas Appliances, ANSIZ21.69 or Connectors for Movable Gas Appliances, CAN/CGA-06.16, and a Quick Disconnect, device that complies with the standard for Quick Disconnect Devices for Use with Gas Fuel ANSIZ21.41, or Quick Disconnect Devices for use with Gas Fuel, CAN1-6.9, and adequate means must be provided to limit the movement of the appliance without depending on connector and the quick disconnect device or its associated piping to limit the appliance movement.
13. Before connecting gas check that gas valve on the appliance is turned “off” (gas valve handle in vertical position.)
14. Check for leaks using soapy water or other suitable leak detector. Rinse off the soapy water after testing. **DO NOT USE OPEN FLAME FOR TESTING.**

LIGHTING AND SHUT DOWN INSTRUCTIONS

Always follow these lighting and shut down instructions when lighting your rice cooker. A five minute complete shutoff period is required before lighting or relighting pilot. Check for gas leaks before relighting unit. Use soapy water or other suitable leak detector. Rinse off the soapy water after testing.

Notice to Installer: The following must be performed to insure proper operation.

1. Remove Pot, Outer Jacket, and Drip Tray.
2. Turn gas valve to "ON" position as in figure 2 below.
3. Gently push on the #2 COOK button. It should stop half way down and not engage. This is a safety feature that does not allow accidental start of the main burner unless the pilot button has already been pushed.
4. Push the left button marked #1 START down until you hear a click, then release it. This is the ignition lever and the pilot should light. The red button marked WARM controls the pilot and is hidden by the #1 START button when off. Pushing the #1 START button also depressed the WARM button, exposing it. It will stay down until pushed up to extinguish the pilot. If the pilot has not lit, repeat until pilot lights.
5. If pilot fails to remain lit, see Trouble Shooting.
6. Replace the Pot, Outer Jacket, and Drip Tray in their proper order. With the pilot lit, push the #2 COOK button down to its position without water in the pot. The rice cooker should shut off within 3 to 4 minutes. If it fails to shut off, push the #2 COOK button up to its off position and see Trouble Shooting. If it shuts off normally, add a gallon of water and wait for the "click" sound indicating that the sensor has reset. With the pilot lit, again press the #2 COOK button. The rice cooker should boil the pot dry and then shut off. If it fails to shut off normally, push the #2 COOK button up to its off position and see Trouble Shooting.

SHUT DOWN: When removing the pot, make sure to push the red button WARM until it clicks and is hidden by the start button. It is then in the "OFF" position. A five minute complete shutoff period is required before lighting or relighting pilot.

WARNING: When igniting the pilot, position the Jacket Window directly over #1 START and #2 COOK buttons. Do not be too close to the viewing hole when igniting.

FIGURE 1

FIGURE 2

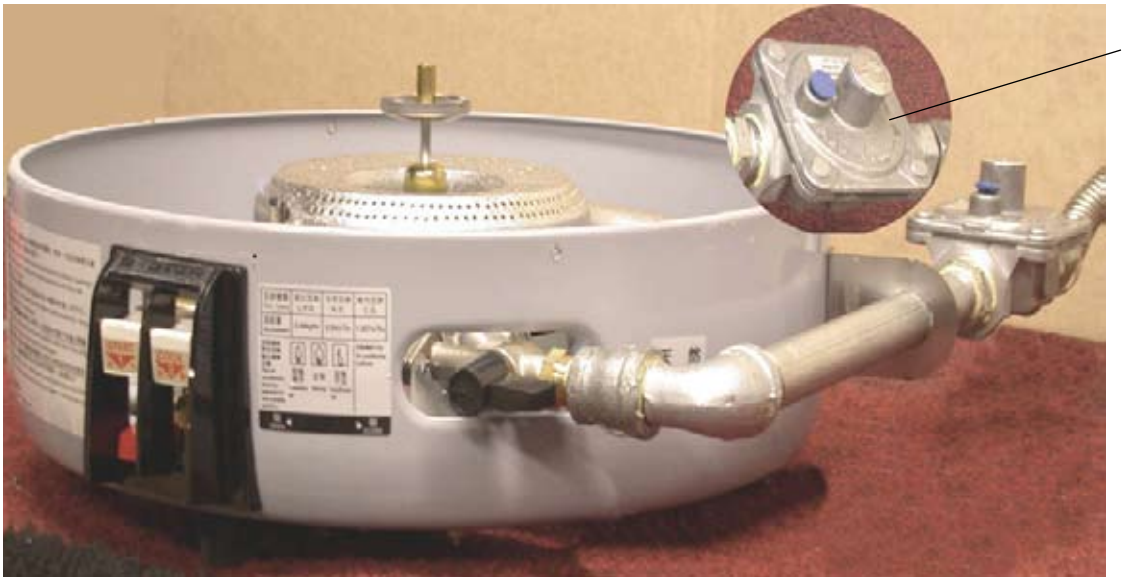

RM-55 REAR CONNECTION INSTALLATION INSTRUCTIONS

To install the provided pressure regulator:

a. Locate gas supply for the rice cooker. Installation must comply with the National codes so there should be a shut off valve on the gas supply line to the rice cooker.
b. Install the supplied pressure regulator at the end of the rear connection manifold. An arrow on the body of the pressure regulator indicates the direction of the gas flow. The arrow must be pointing in the direction to the rice cooker. The rice cooker will not operate if the regulator is improperly installed.
c. If required, install the supply side of the quick disconnect hose (provided by others) to the regulator per the manufacturer's instructions.
d. **Check your installation for leaks with an approved leak detector.** Be sure to use approved materials on the pipe threads to prevent gas leaks.

When appropriate, light the rice cooker and check for proper operation.

RICEMASTER

NSF & ETL Listed: RM-55N-R Natural Gas/RM-55P-R Propane Gas
Non-Certified: RM-50N-R Natural Gas/RM-50P-R Propane Gas
Automatic Gas Rice Cooker

OWNER'S MANUAL
SECTION II: Operating Instructions

FOR YOUR SAFETY

Do not store or use gasoline or other flammable vapors and liquids in the vicinity of this or any other appliance.

TO THE PURCHASER

Contact your local gas supplier and ask instructions in the event the user smells gas. This information should be posted in a prominent location.

WARNING

Improper installation, adjustment, alteration, service or maintenance can cause property damage, injury or death. Read the Installation, Operating and Maintenance Instructions thoroughly before installing or servicing this equipment.

THE INSTALLER MUST LEAVE THIS MANUAL WITH THE UNIT AFTER INSTALLATION.

THE CONSUMER IS TO RETAIN THIS MANUAL FOR FUTURE REFERENCE.

1. Make sure the unit is properly assembled with Drip Tray, Outer Jacket, Rice Pot and Cover in their proper positions. The rice should be in the pot prepared by the methods described on page 8. If the components are not properly seated, the unit cannot operate normally.
2. Turn gas valve to "ON" position as in figure 2 below. Position the Jacket Window directly over #1 START and #2 COOK buttons.
3. Push the left button marked #1 START down until you hear a click, then release it. This is the ignition lever and the pilot should light. The red button marked WARM controls the pilot and is hidden by the #1 START button when off. Pushing the #1 START button also depressed the WARM button, exposing it. It will stay down until pushed up to extinguish the pilot. If the pilot has not lit, repeat as necessary, If pilot fails to light, see Trouble Shooting.
4. After the pilot has lit, push Main Burner Control Button marked #2 COOK to ignite the main burner and start cooking. The cook cycle will last approximately 22 minutes. When the cook button jumps up to the "OFF" position, allow the rice to remain undisturbed for an additional 10 minutes to cure. The curing time allows the rice to become fluffy and improves taste.

WARNING: When igniting the pilot, position the Jacket Window directly over #1 START and #2 COOK buttons. Do not be too close to the viewing hole when igniting.

FIGURE 1

FIGURE 2

SHUT DOWN: When removing the pot, make sure to push the red button WARM until it clicks and is hidden by the start button. It is then in the "OFF" position. A five minute complete shutoff period is required before lighting or relighting pilot.

HOW TO USE YOUR RICE COOKER

ASSEMBLY & COOKING

Step 1. Place the Rice Pot with rice and water into the Outer Jacket. Make sure that the Rice Pot is level and sitting evenly in the Jacket.

Step 2: Place the lid on the Rice Pot and light the burner. To light the burner, refer to operating instructions on page 6. Do not open lid while cooking. When the cooking is completed, the COOK button will pop up and the main burner will automatically shut off. Do not serve the rice yet; see instructions on the following page for curing. The pilot keeps cooked rice hot (about 160˚F/71˚C) for four hours.

Step 3: Shut pilot off by pushing up the red keep warm button. See Shut Down instructions on page 6.

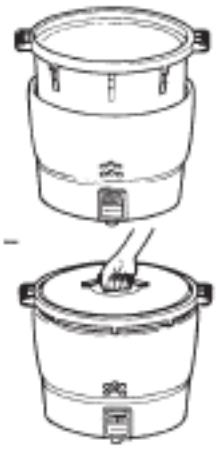

*The misalignment or improper setting as above will cause early shutoff of the main burner.

NOTE:
The misalignment or improper setting will cause early shut off of the main burner.

SEASONING THE RICE POT

A new Rice Pot should be carefully seasoned once before use. Wash rice in the Rice Pot using tap water. Remove the rice, leaving only the "milky" looking water in the pot. Light the pilot and initiate the cooking process. Using ordinary water for seasoning the pot may cause discoloration but will not effect either the unit or cooked rice.

VISUAL BURNER CHECK

When operating, burner flame should be light blue in color and should have no yellow tips or lifting from the burner. The air/gas mixture adjusted by moving the air shutter arm under the unit below the main gas valve.

RICE PREPARATION

1. Measure rice with measuring cup provided. This unit will cook a minimum of 15 pounds of dry rice. Uncooked rice volume triples after cooking.
2. Determine the quantity of rice to be cooked. The maximum is 10 full measuring cups, the minimum is half that amount. Measure the rice into the pot and wash 4 or 5 times with fresh water. When wash water becomes almost clear, stop washing and drain.
3. Cover the rice with 1" water. A time-honored alternate method is to gently place your hand on the rice. Add enough water to reach the center of your knuckles where your fingers join your hand.
4. Cover rice pot with stainless steel cover provided. Check to be sure that the pot is properly seated in the cooker base and the water level is of uniform depth covering the rice. For really tender, delicious rice, let rice soak in pot for about 10 minutes before igniting main burner.

RICE COOKING TIPS

1. When cooking half pot of rice, turn gas valve full on, and note flame on burner. The turn gas valve slightly to OFF position until flame is reduced by half.
2. Length of cooking time will vary according to type of gas used, gas pressure to burner, and quantity of rice being cooked.
3. When main burned automatically shuts off, it is recommended that the rice be broken up or "turned" using a pot fork. Cover the rice and wait 10-15 minutes allowing the rice to "cure" before serving. Rice in this unit will remain hot (about 160˚F/71˚C) for four hours.

CARE AND MAINTENANCE

1. The Rice Pot of your cooker is designed for use in this unit only. Never set the pot over any other stove as it will damage the thermostatic element and cannot operate automatically in the future.
2. Keep the Piezo Electric Ignition clean and dry by wiping foreign matter off with dry cloth as necessary. Do not press down ignition know when anyone is touching electrode as electric shock will result. If lighter fails to spark, check carefully that it is clean, dry, and the black neoprene line from the ignition assembly is connect. Call your dealer or gas service for assistance if it continues to malfunction.
3. Cooker base connected to gas supply may be cleaned with damp cloth and mild soap or detergent. Never immerse the unit into water for cleaning. Be careful never to strain gas connection as this will damage the manifold and could be very dangerous.
4. Rice Pot, Cover, and enamel body may be removed for cleaning. These parts should be cleaned and carefully reassembled to prevent damage to unprotected cooking sensor. Do not force fit these parts as they assemble easily if properly positioned. refer to sketch and picture when in doubt.
5. After cooker is cleaned and assembled, leave all gas valves in "OFF" position, Rice Pot centered and resting evenly on enamel out body of cooker.

TROUBLE SHOOTING

If your rice cooker is not working automatically, perform the following diagnostic tests:

1. With the pilot lit and an empty rice pot in the cooker, start the Main Burner. Expect to hear a click after 3 minutes and 15 seconds. The click is the sound of the sensor reaching shut off temperature. If the Main Burner does not shut off, refer to the instructions below on "Main Burner does not shut off automatically."
2. If the Main Burner shuts off, the sensor is working. Pour a gallon of water into the rice pot and listen for the click of the sensor returning to its cooking position. After insuring the pilot is lit, start the Main Burner and cover the rice pot. If the cooker shuts off within 20 minutes, remove the cover and allow the water to evaporate. If the cooker shuts off after the water has evaporated, it is working normally. Feel free to contact us with any questions you may have about the operation of this rice cooker.

IF THE COOKER SHUTS OFF TOO SOON, NEVER PRESS THE COOK BUTTON A SECOND TIME. THE RICE WILL BURN! The sensor has activated and must cool to reset.

DIFFICULTY	CAUSE	REMEDY
Main Burner does not shut off automatically. Perform the diagnostic tests above.	Shut off stem tip is worn or broken. See photo.	Replace tip or stem assembly.
	Sensing element is missing or failed	Replace Sensing element per instructions below.
Main Burner shuts off before rice is done, pilot remains lit	Insufficient water to cook rice	Cook rice with recommended amounts of water.
	Rice pot and/or Outer Jacket are not correctly positioned.	Correctly position Drip pan, Rice pot and/or Outer Jacket
	A heavy pot could cause the shut off stem to release early.	Remove one washer from under the perforated disc of the shut off stem.

If the tip of Shut Off Stem is broken off, the rice cooker cannot shut off.

Proper installation of Encased Sensor in bottom of rice pot.

No. 56855 Encased Sensor replacement instructions:

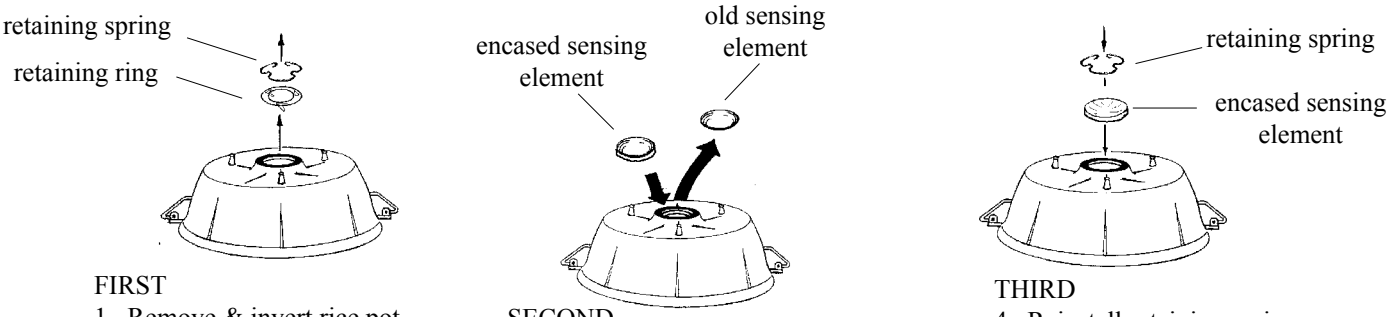

FIRST
1. Remove & invert rice pot
2. Remove retaining spring and retaining ring (ring only with old sensing element

SECOND
3. Replace sensing element.
Important: Concave side of sensing element with letters must be exposed

THIRD
4. Reinstall retaining spring

TOWN FOOD SERVICE EQUIPMENT CO., INC. • 72 Beadel St. • BKLYN • NY 11222

DIFFICULTY	CAUSE	REMEDY
Main burner shuts off while cooking	Overloaded pot	Remove washer below tip on shut off stem (picture on pg. 10)
	Cook lever bent	Return to factory for service. Request RGA (page 15)
	Insufficient gas pressure	Check gas pressure. Install all gas valves are open.
	Sensing element is worn out	Replace Sensing Element per instructions on page 10.
Insufficient Pilot Burner flame	Insufficient gas pressure	Check gas pressure. Install all gas valves are open. Contact your gas supplier if problem persists.
	Pilot orifice is blocked	Clean or replace pilot orifice.
Main Burner flame is yellow. Black soot collects on bottom of rice pot	Unit connected to incorrect type of gas	Check Rating Plate. Confirm unit is connected to correct type of gas.
	Air shutter closed	Adjust/open air shutter
	Spillage on Main Burner or blockage inside Main Burner	Clean or replace Main Burner
Flame lifts off Main Burner	Spillage on Main Burner	Clean or replace Main Burner
	Excessive air	Adjust/Close air shutter
Boiling over	Too much water	Cook with proper amount of water. See instructions.
Pot interior turns gray	Rice pot is put away for a long time without having been washed.	Thoroughly wash pot and dry.
	Pot is sterilized by boiling water but it turns gray.	Discoloration will not harm rice pot or rice.

Units requiring warranty service must be returned to Town Food Service Equipment Co., Inc for repair. See Warranty on page 15. Call us at (718)388-5650 with your model and serial number and request authorization to return for warranty repair (RGA #). Non warranty parts are available by calling us at (718)388-5650.

PARTS DIAGRAM: RM-55/50 NATURAL & PROPANE GAS

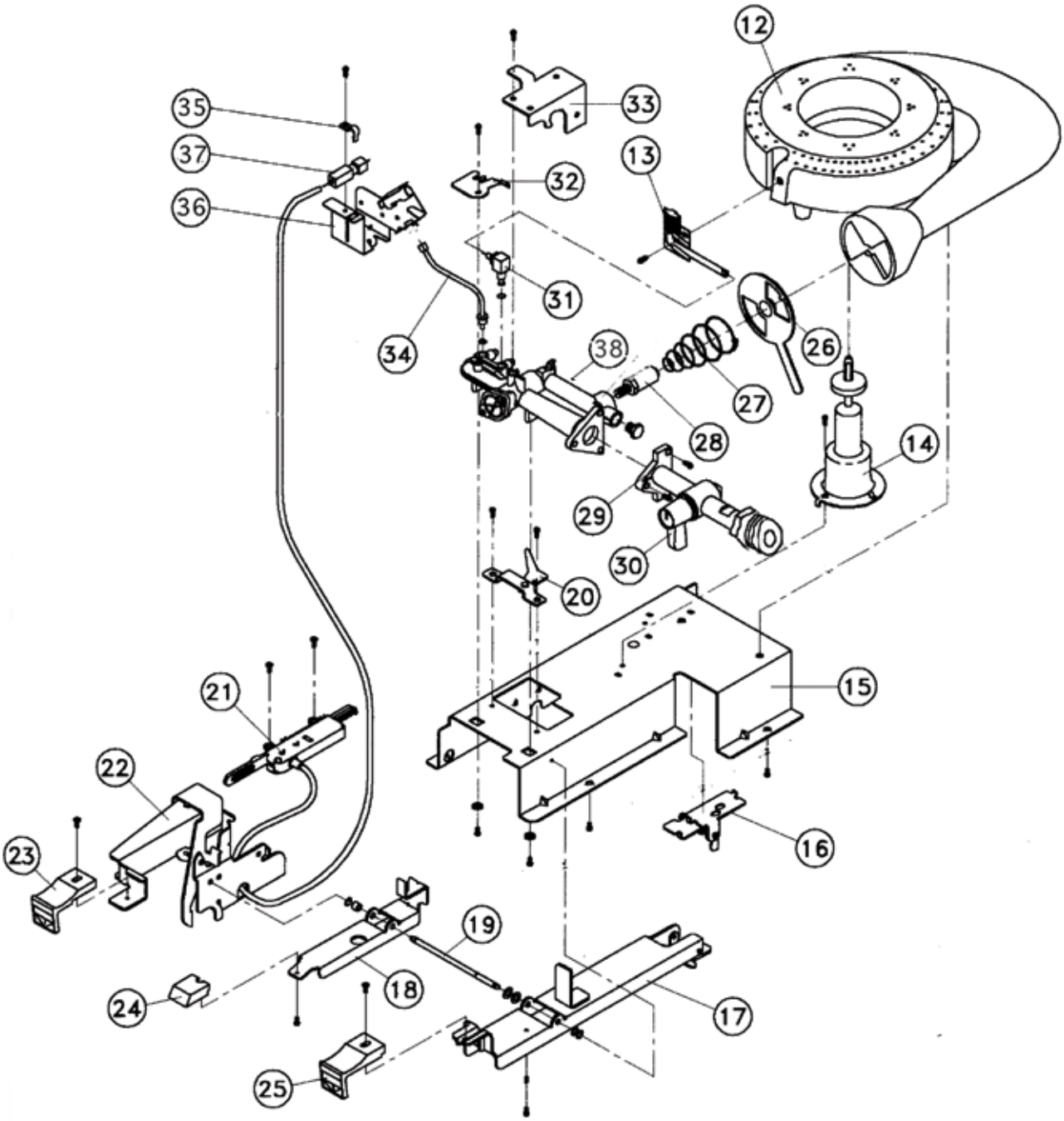

PARTS DIAGRAM: RM-55/50 NATURAL & PROPANE GAS

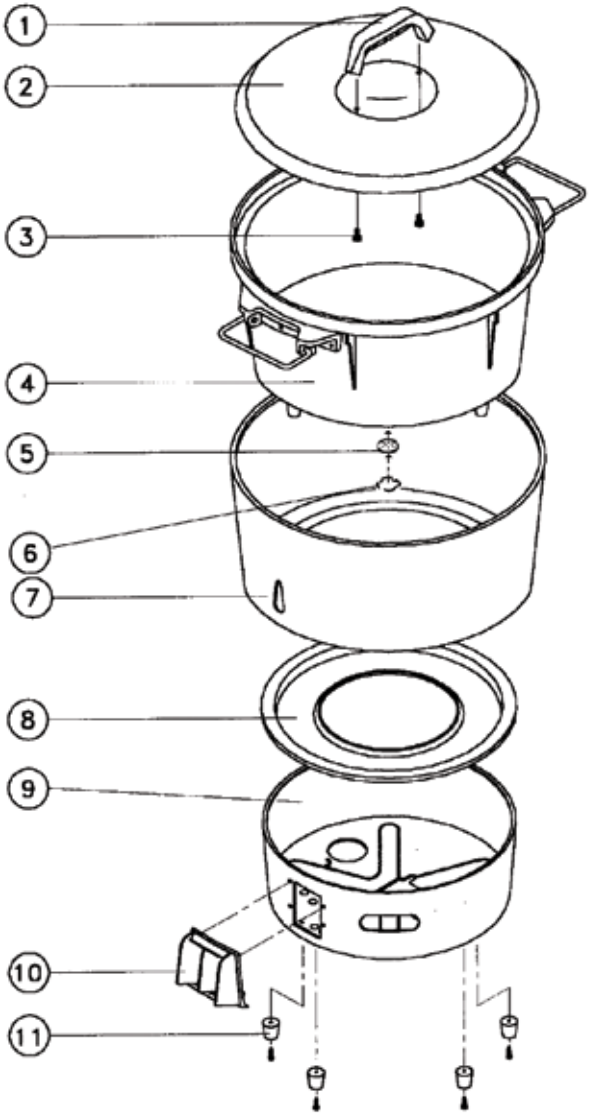

PARTS LIST: RM-55/50 NATURAL & PROPANE GAS

Dwg. No.	Parts No.	Descripton
1	56881	Cover Handle, Heat Resistant
2	56882	Stainless Steel Rice Pot Cover w/handle
3	56881-S	Cover Handle Screw
4	56853	Cast Iron Aluminum Rice Pot
5	56855	Encased Sensing Element, Bimetalic
6	56856	Sensing Element Retaining Spring
5/6	56854	Sensing Element Kit
7	56884	Outer Jacket for RM50
7	56884A	Outer Jacket for RM55 “RiceMaster”
8	56885A	RM-55 Stainless Steel Base Cover (56885 for RM50)
9	56852-1	Lower Body for RM50 (RED)
9	56852-1A	Lower Body for RM55 (GREY)
10	56866	Control Panel Frame
11	56863	Non-Mar Feet
12	56852-2	Cast Iron Burner
13	56878	Pilot with Retaining Plate
14	56857	Shut off Stem Assembly
15	56852-3	Burner Assembly Base
16	56857-1	Burner Ignition Arm Release
17	56867	Burner Ignition Arm
18	56864-1	Pilot Ignition Arm
19	56864-2	Ignition Arm Shaft
20	56862-2	Burner Ignition Arm Limiter
21	56870	Piezo Ignition Assembly
22	56870-1	Ignition Lever Assembly
23	56865	#1 Start Button
24	56864	Red Pilot Warmer Button
25	56862	#2 Main Burner Button
26	56852-4	Air Shutter
27	56852-4S	Air Shutter Spring
28	56868	Main Burner Orifice - Natural Gas (.475mm/#77 drill)
28	56869	Main Burner Orifice - Propane Gas (.343mm/#80 drill)
29	56860	On/Off Gas Valve
30	56861	Gas Valve Knob
31	56879	Pilot Orifice - Natural Gas
31	56880	Pilot Orifice - Propane Gas
32	56874-1	Ignition Line Retaining Plate
33	56872	Pilot Orifice Retaining Plate
34	56874	Pilot Ignition Line, Natural Gas
34	56873	Pilot Ignition Line, Propane Gas
35	56871-1	Ceramic Electrode Clamp
36	56870-2	Ceramic Electrode Holder
37	56871	Ceramic Electrode
38	56875	Manifold Assembly, Natural Gas
38	56876	Manifold Assembly, Propane Gas
	RM-55N-REG	¾” Pressure Regulator, Natural Gas
	RM-55P-REG	¾” Pressure Regulator, Propane Gas

LIMITED WARRANTY

Town Food Service Equipment Co., Inc. (Town) warrants the equipment to be free of defects in materials and workmanship, subject to the terms specified below. This warranty is limited to parts replacement and does not include any labor allowance. Any service charges or charges for parts replacement are your responsibility.

Town warrants the RM-55 and RM-50 to be free of defects in materials or workmanship for a period of six months. The warranty period shall commence at time of shipment from Town. The warranty period may be extended, at Town's option, if proof of installation (specifying model and serial number) at a later date, but in no case shall warranty be extended beyond nine months after date of shipment from Town.

Parts and labor are covered for the warranty period for properly packed units returned to Town prepaid. Town cannot be responsible for shipping damages to any unit returned with improper packaging. Parts that have failed due to defective materials or workmanship will be replaced at no charge. Units repaired under warranty will be returned freight prepaid. Warranty for the new parts will be for the remainder of the original warranty period.

This warranty does not cover any failures or operating difficulties due to accident, abuse, misuse, alteration, misapplication, improper installation or improper maintenance or service.

Town does not authorize any person or company to assume on its behalf any obligation or liability in connection with this unit in any matter whatsoever.

If warranty service becomes necessary, bring the unit to the dealer who sold you the unit. Request them to carefully pack the unit. Be sure to insulate the enamel jacket from the rice pot. If the pot is allowed to contact the enamel jacket during shipment, it will become chipped. If the base is not properly packed it may become dented. Town will charge for repairs to units returned due to abuse for any reason.

The returning agency is entitled to request from the purchaser the costs of shipping and handling charges to return the unit. Before any unit is returned, call Town at (718)388-5650 and request a Return Goods Authorization (RGA) number. Be advised this RGA is only authorization to return your unit for evaluation. No credit of any kind may be taken arising from an RGA. Your unit will be inspected to verify the difficulty for which it was returned. Once the difficulty is verified, it will be repaired and the unit returned at no charge if due to faulty materials and/or workmanship. If defective for any other reason, the unit will be repaired and the customer charged for the cost of the labor and materials for the repair plus return delivery costs.

For your records, you may wish to record the following information as it will be required in the event service is required:

Dealer unit purchased from_____ date_____

Unit Model No._____ Serial No._____ type of gas _____

MEXICAN RICE

Try Maria's Mexican Rice*, an authentic recipe from Veracruz.
We brought this back from a customer of a Mexican distributor. It is simple to do and yields excellent flavors.

8 oz. vegetable or peanut oil
3 lbs washed rice
juice of one lemon
two cloves garlic, smashed, finely chopped
one 28 oz. can crushed tomatoes
4 quarts cooled chicken stock
3 boneless chicken breasts, precooked & cubed
2-3 sprigs finely chopped cilantro
3 tablespoons salt
2 finely chopped jalapeños

Push the #1 Start button to light the pilot. Verify ignition of the pilot through the jacket window. Push the #2 Cook button and light the main burner. Verify ignition of the main burner through the jacket window. Add the oil. There should be sufficient oil to cover the bottom of the rice pot. Allow the oil to heat.

The sensor in the bottom of the pot is designed to turn the rice cooker off when it senses the water in the pot is gone. The oil in the bottom of the pot is being heated by the burner and will surpass the temperature of boiling water. At this point the sensor will make a "click" sound and "pop" into its expanded position as the temperature of boiling water has been exceeded. This causes the #2 Cook button to jump to the off position and the burner will shut off.

Mexican Rice is fried before liquids are added. The oil must be at frying temperature, about 375ºF. To do this, push the #2 Cook button once again to continue heating the oil. BEWARE: the automatic shut off feature of the sensor is now disabled and the unit will not shut off automatically. To turn off the main burner one must lift the #2 cook button.

Heat the oil to frying temperature. Add grains of rice to test the temperature of the oil. When the test grains of rice sizzle and turn white, add the balance of the rice. Fry the rice by allowing it to cook for 30 seconds, then mix thoroughly. Let it fry for an additional 30 seconds, then mix again. Repeat this process until the rice begins to 'cashew' or have a light brown color, about 7-10 minutes.

After the rice is started to change color, add the garlic and stir for one more minute. At this point make sure to wear a heat resistant mitt as the pot is very hot and the liquids about to be added will vaporize quickly and one can be scalded. Stir in crushed tomatoes and fry for one more minute. Turn off the burner by raising the #2 Cook button to its off position. Add the balance of the ingredients and stir to mix. About 4-5 minutes after you shut off the main burner, listen for a "click" sound indicating the sensor has reset to its original shape restoring its automatic capabilities.

Relight the main burner by pushing down the #2 Cook button. Verify ignition through the jacket window. The unit will now cook the rice and automatically shut off when the rice is done, about 15 minutes. When the unit shuts off, allow the rice to "cure" undisturbed in the rice cooker for 10 minutes. Then mix and serve the rice.

Tip: use the rice cooker to braise the chicken. The braised chicken adds flavor to the rice when fried in the same pot.

NOTE: Consistency of rice will vary depending on amount of chicken stock used. For very spicy rice add additional jalapeños to taste. Be creative... you may add peas, corn, or finely chopped bell peppers. Bueno provecho!

* Recipe compliments of Maria Asuncion Aquirre de King, Dim Sum King, Veracruz, Mexico