Installation & Operation Manual

Commercial Back Bar

- Remote & Self-Contained Standard height and low height Models BBR, BBS, BBRLP & BBSLP Series
- Remote & Self-Contained Narrow Door Models BBRN & BBRSN Series
- Remote & Self-Contained Pass Thru Models PTR & PTS Series
- Remote & Self-Contained Sliding Door Models SDB & SDP Series
- Self-Contained Dual-Zone DZS Series Concessionaire
- Direct Draw DDC & DDS Series

Model BBSLP108 Shown

5 Year Compressor Warranty

eco friendly
R290 Hydrocarbon Refrigerant

Form No. Z2604
Rev A 11.24.2020

TABLE OF CONTENTS

General Information 2
Safety 2
Prior To Installation 3
Installation 4
Operation 5
Adjustments 7
Maintenance 11
Troubleshooting 14
Dimensions 16
Wiring Diagrams 34
Warranty 48

GENERAL INFORMATION

Introduction

Congratulations on your purchase of a Perlick commercial back bar product. This manual has been prepared to assist you in the installation of your cabinet and to acquaint you with its operation and maintenance.

We dedicate considerable time to ensure that our products provide the highest level of customer satisfaction. If service is required, your dealer can provide you with a list of qualified service agents. For your own protection, never return merchandise for credit without our approval.

We thank you for selecting a Perlick product and assure you of our continuing interest in your satisfaction.

Warranty

To register your product, visit our web site at www.perlick.com. Click on “Commercial”, then “Service”. Click on the link “Warranty Registration Form”. You must complete and submit this form or the installation date will revert back to the ship date.

Please record the purchase date and the dealer’s name, address and telephone number below.

Model Number: _____
Serial Number: _____
Purchase Date: _____
Dealer Name & Address

_____
_____
_____
Phone Number_____

SAFETY

PLEASE READ all instructions completely before attempting to install or operate the unit. Take particular note of the DANGER, WARNING and CAUTION information in the manual. The information is important for the safe and efficient installation, operation and care of your Perlick unit.

⚠ DANGER **Indicates a hazard that WILL result in serious injury or death if precautions are not followed.**

⚠ WARNING **Indicates a hazard MAY cause serious injury or death if precautions are not followed.**

⚠ CAUTION **Indicates a hazard where minor or moderate injury may occur if precautions are not followed.**

NOTICE **Indicates that property damage may occur if warnings or instructions are not followed.**

IMPORTANT!
Read and understand all information in this manual before attempting the installation.
All plumbing and electrical work must be performed by a qualified technician and conform to all applicable state and local codes.

PRIOR TO INSTALLATION

Uncrating and Inspection

Remove all crating material. Carefully inspect cabinet for hidden damage. If damage is discovered, file your claim immediately with the transport company. Perlick is not responsible for damage in transit.

⚠ WARNING Take caution when handling, moving and using the product to avoid damaging the refrigerant tubing or increasing the risk of a leak.

⚠ DANGER All service work shall be performed by factory authorized service personnel and all component parts shall be replaced with like components to minimize the risk of possible ignition due to incorrect parts or improper service.

⚠ CAUTION If service is necessary, repair work must be performed by a Perlick authorized servicer. Work done by unqualified individuals could potentially be dangerous and will void the warranty.

⚠ CAUTION Do not cut cardboard sleeve covering the unit. Cutting may result in damage to the exterior of the cabinet. Failure to follow this procedure may damage the compressor and void warranty.

1. Uncrate the unit on flat, level surface. Remove the cardboard sleeve by removing the banding securing the sleeve to the shipping base. Carefully lift the cardboard sleeve up over the top of the unit.
2. Carefully lift unit off the base and onto a hand truck or dolly. Make sure unit is balanced on transporting device using soft, flexible strapping. Protect unit surfaces with cloth material where strapping contacts unit.

⚠ CAUTION Do not lift unit by drawer, shelving or door handles or damage to the unit could occur.

⚠ WARNING To prevent personal injury, two people minimum required to lift the unit. Larger units may require additional personnel.

3. Before moving unit, secure door(s) to unit with tape to prevent from opening.
4. Carefully move unit to installation site and place in front of opening.

⚠ CAUTION Finished flooring should be protected with appropriate material to avoid damage from moving the unit.

Plumbing

⚠ CAUTION Do not over-tighten drain fitting or damage to the threads could occur.

Plumbing

Self-Contained

Condensate from the cooling coil is automatically evaporated from the condensate pan located in the condensing unit housing on self-contained models.

Self-Contained & Remote

Each unit is equipped with a floor drain located in the right rear corner of the cabinet. The drain can be plumbed to an external floor drain by connecting to the 3/4” NPT thread connection on the side, or the 1” NPS thread connection out the bottom, of the unit. Both drain ports come plugged from the factory and can be removed if needed.

Remotes

Dispensing head drainers should be plumbed to a dump tank or floor drain. Always rinse drainer with sufficient amounts of water daily to prevent drain from clogging.

Remote evaporator condensate plumbing should be routed out on of the cabinet side access holes or to one of the floor drains and should always be sloped to the drain with no rise to prevent drainage. A trap should be used, however, trap peak must be below condensate drain pan nipple.

Electrical

The cabinet must be connected to a separately fused power source (see Electrical Specification Plate affixed to unit) in accordance with National and Local electrical codes.

Self-contained Perlick units come equipped with a NEMA 5-15P 90° plug with an 8’ cord extending beyond the rear of the cabinet. The electrical outlet must be flush with, or recessed into, the wall surface.

NOTE: Never use an extension cord to extend the power cord to the electrical receptacle.

⚠ CAUTION **If unit has been laid on its back or sides, place unit upright and allow minimum of 24 hours before connecting power. Failure to follow this procedure may damage the compressor and void the warranty.**

⚠ CAUTION **Do not attempt to operate the equipment on any other power source than that listed on the Electrical Specification Plate attached to the unit.**

⚠ DANGER **ELECTROCUTION HAZARD! Electrical grounding is required. Appliances furnished with a 3-prong (grounding) polarized plug are equipped for your protection against possible shock hazards.**

- **Never remove the round grounding prong from the plug.**
- **Never use a 2-prong adapter.**
- **Never use extension cord to connect power to the unit.**
- **If a 2-prong receptacle is encountered, or a longer power cord is required, contact a qualified electrician to have it replaced in accordance with applicable electrical codes.**

⚠ DANGER **Failure to comply with these electrical guidelines may result in possible death or serious injury, fire, or loss of property.**

NOTICE **This product contains blown foam insulation using blowing agent R-611 (Methyl Formate). The foam in this product does not contain HFC's, CFC's, or HCFC's.**

INSTALLATION

General Information

- For units equipped with a power cord, the cord and plug may be aligned with a recess in the back panel to allow the unit to be pushed closer to the wall. For correct alignment, the wall outlet must be located 4" - 10" above the floor.
- Floor must be level in area of installation.

Preparing the Space

⚠ CAUTION **Make sure the floor under the unit is level with the surrounding finished floor. Protect a finished floor with plywood, cardboard or some other suitable material before moving the unit into place. Failure to do this may result in damage to the floor.**

NOTE: If unit has been laid on its back or sides, place unit upright and allow minimum of 24 hours before connecting to a power source. Failure to follow this procedure may damage the compressor and void warranty.

1. Make sure the space opening is correctly sized for the unit. See Dimension drawings at the back of this manual for correct dimensions.

NOTE: For a cabinet door to open properly, the door must open a minimum of 90°. Use a minimum 3" filler in corner installations to assure a 90° opening. Allow 24" clearance in front of the unit for full door swing and shelf/drawer pull-out.

2. Check that the following are level and square:
   - Front and interior opening
   - Installation opening and floor surface

NOTE: The floor under the unit must be at the same level as the surrounding finished floor.

Casters or Legs

Refer to the instructions included with the Casters or Legs Kit.

Installing the Unit

⚠ CAUTION **If unit has been laid on its back or sides, place unit upright and allow minimum of 24 hours before connecting power.**

1. With power applied to the unit, check that the lighting and cooling functions operate properly, then turn off power to the wall outlet and/or circuit breaker.
2. Position the cabinet into place using rollers when necessary.

NOTE: Proper air flow around the condensing unit is necessary for efficient operation. Never obstruct the air flow in and out of the condensing unit.

3. When cabinet is in place, check installation with carpenter's level. When the unit is level front-to-back and side-to-side, accumulated water will drain out of cabinet to evaporator drain.
4. Turn on power to the outlet and/or circuit breaker.

Electric Condensate Evapaway (Optional)

For installation in areas of high humidity, a 115-volt electric condensate pan can be installed underneath the cabinet to collect and evaporate the condensate from the cabinet evaporator. A 6' 3-prong plug is included. A separate circuit should be provided for the heater. The kit can be used only on cabinets equipped with 4" minimum legs; it cannot be used on units equipped with platform or base plate kits. Follow instructions supplied with the kit.

Base Plate Installation (Optional)

Once the unit is secured in place, install the base plate brackets to the cabinet bottom in the holes provided. Attach base plate to brackets. Refer to the installation instructions included with the Base Plate Kit.

Sealing Cabinet to Floor

For units without casters or legs, it may be necessary to seal the base of the cabinet to the floor. This can be accomplished by laying a bead of silicone sealant between the base of the cabinet and the floor (Figure 1).

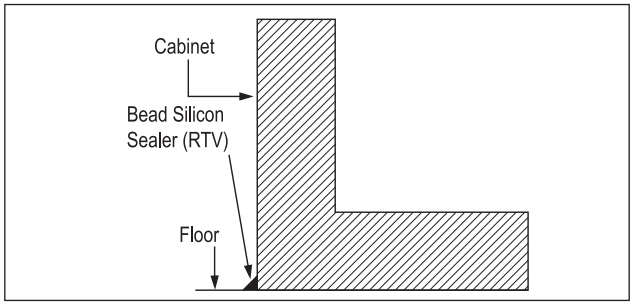

Figure 1: Sealing Cabinet to Floor

Faucet and Dispensing Head Installation

Refer to the instructions included with the Faucet and Dispensing Head Kit.

OPERATION

Refrigeration and Temperature Control (Non-DZS Models)

The cabinet is equipped with a heavy-duty refrigeration system designed to automatically maintain a storage temperature of approximately 36° F.

Allow a minimum of 24 hours for ambient temperature product to reach storage temperature.

Draft beer should be stored at a temperature between 32° – 38° F. The most common cause of dispensing problems is improper temperature; beer will foam at warmer temperatures.

Refrigeration and Temperature Control (DZS)

The unit is equipped with a heavy-duty, digitally controlled, dual-zone refrigeration system designed for two separate compartments. The temperature controls have been factory set according to customer specifications based on intended use The digital controller on the left controls the compartment on the left side and the digital controller on the right controls the compartment on the right side.

- Factory temperature settings: Approximately 36°F for refrigerator, 45°F for white wine storage (compartment closest to the condensing unit/refrigeration module), and 60°F for red wine storage. Adjustable range is 34°F - 42°F for the refrigerator and 40°F - 60°F for wine.
- Coldest compartment must always be the compartment closest to the condensing unit/refrigeration module.
- Minimum temperature difference between two compartments is 10°F. Maximum temperature difference between the two compartments is 30°F for the DZS60 Model and 20°F for the DZS36 Model.
- The unit is not intended for temperature settings outside the paramaters mentioned above. Attempts to deviate from the sepecified temperature paramaters may result in unsatisfactory serving temperatures.

Allow a minimum of 24 hours for ambient temperature product to reach storage temperature.

Beer will freeze at temperatures lower than 30° F. When beer freezes, the alcohol in the beer may separate and cause the beer to be cloudy with an “off” taste.

The following chart shows how temperature affects beer:

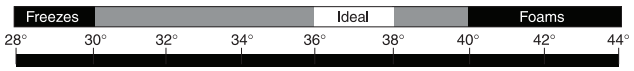

Checking Product Temperature

1. To accurately check the temperature of product stored in the refrigerated compartment, insert an accurate thermometer into a plastic unbreakable bottle, partially filled with water. Tighten bottle cap securely.
2. Place the bottle in the desired area for 24 hours. Refrain from opening the unit during the testing period. After 24 hours, check the temperature of the water. Adjust the temperature accordingly using the procedures on this page.

The following factors affect the internal temperature of the unit:

- Temperature setting
- Room temperature where installed
- Number of times the door is opened and closed
- Length of time door is left open
- Style of door installed
- Door gasket seal and condition
- Amount of time the internal light is illuminated
- Installation in direct sunlight or near a heat source

Interior Light (Not applicable to all models)

The unit is equipped with an interior LED light in the upper front of the unit just inside the door or drawer. The light illuminates when the manual rocker light switch is turned on. The rocker light switch is located behind the LED light on the inside of the frame on either the right or left side (same side as the compressor).

Digital Temperature Control

To Adjust the Temperature Set Point (Figure 2):

1. Press the set button. The label “SET” will be displayed.
2. Press the set button a second time. The set point will be displayed.
3. To change the Set point value, press the ⌃ or ⌄ keys within 15 seconds.
4. Press set to confirm the new setpoint value.
5. After 10 seconds the display will return to indicating the cabinet temperature.

Figure 2: Digital Temperature Controller

ADJUSTMENTS

Changing Door Swing Direction

NOTE: Changing the door swing direction is not advisable if the door is not equipped with a full length handle. Doing so may result in an undesirable handle position..

Hinge Kits

Part No. 67439R: Right Hinging

Part No. 67439L: Left Hinging

Tools Required

- Large flat head screwdriver
- Regular Phillips head screwdriver
- Hinge Kit from Perlick
- Plastic putty knife

Procedure

1. Support the door in the open position as shown in Figure 3. Remove the hinge pin.

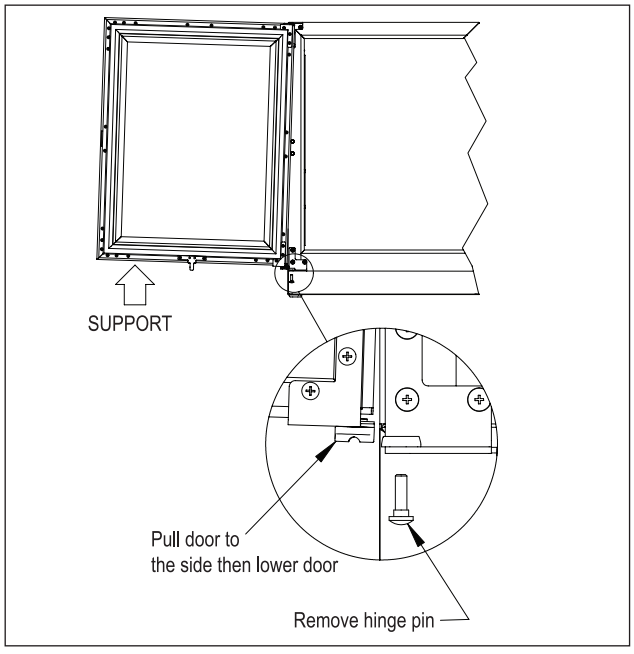

Figure 3: Door Removal

2. Pull door to the side and then lower the door.
3. Remove top and bottom hinge brackets. Retain screws for later use. See Figure 4.
4. Remove the hole plugs from the top and bottom hinge bracket mounting holes (Figure 4). Place the plug in the holes on the opposite side made vacant by removing the hinges in step 3.

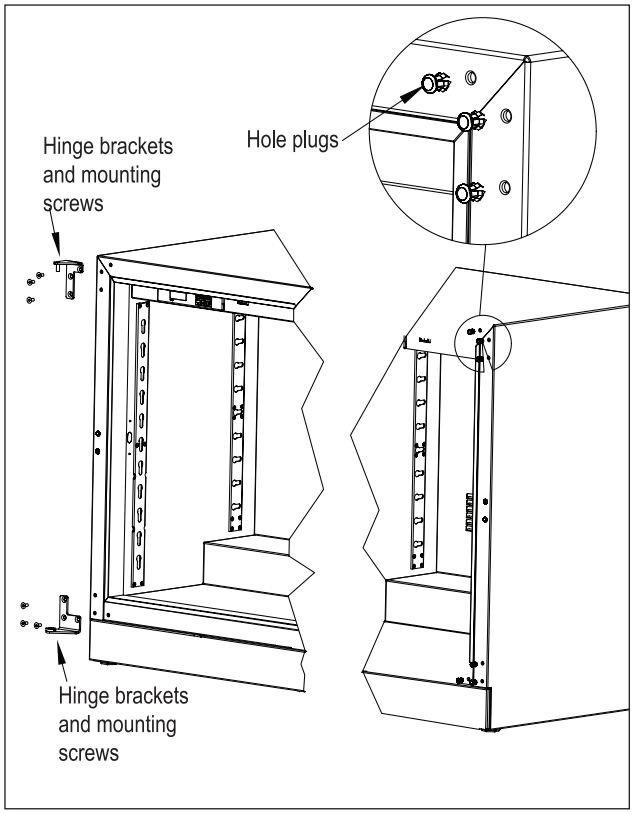

Figure 4: Hinge Removal

5. Using the screws removed in step 3, install the top and bottom hinge brackets from kit (Figure 5).

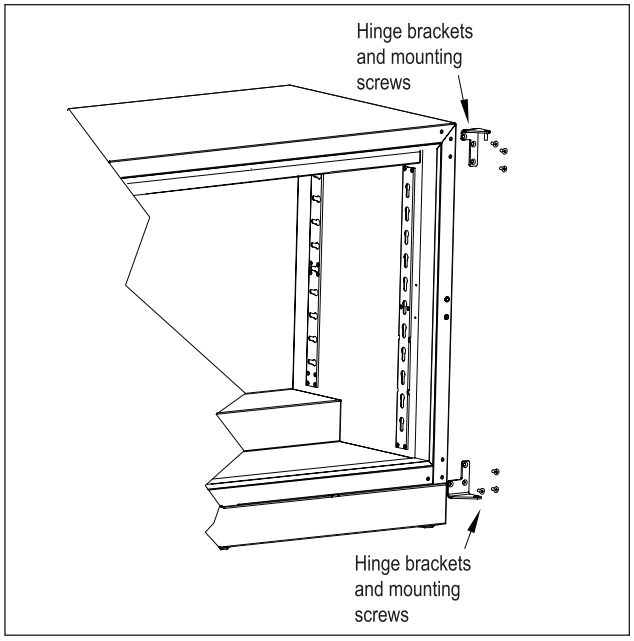

Figure 5: Hinge Installation

6. Remove the top and bottom hinge brackets from the door (Figure 6). Retain the screws for later use.

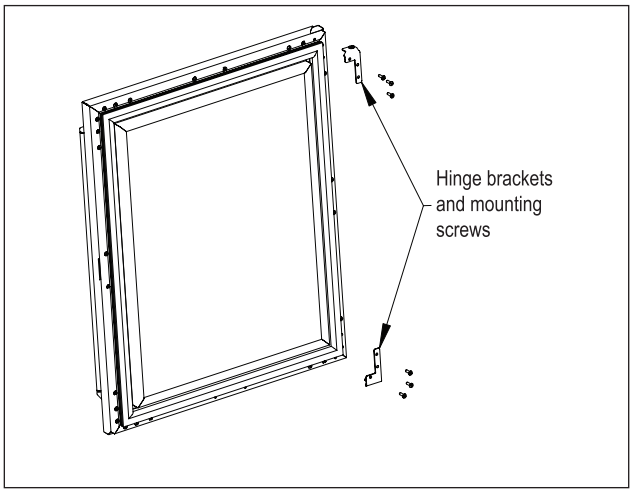

Figure 6: Door Brackets

7. Remove the front panel from the door assembly by removing the inner mounting screws, 4 per side, from the perimeter of the door assembly (Figure 7). Rotate the front panel 180°. The top becomes the bottom. Reattach using the same screws and mounting holes.

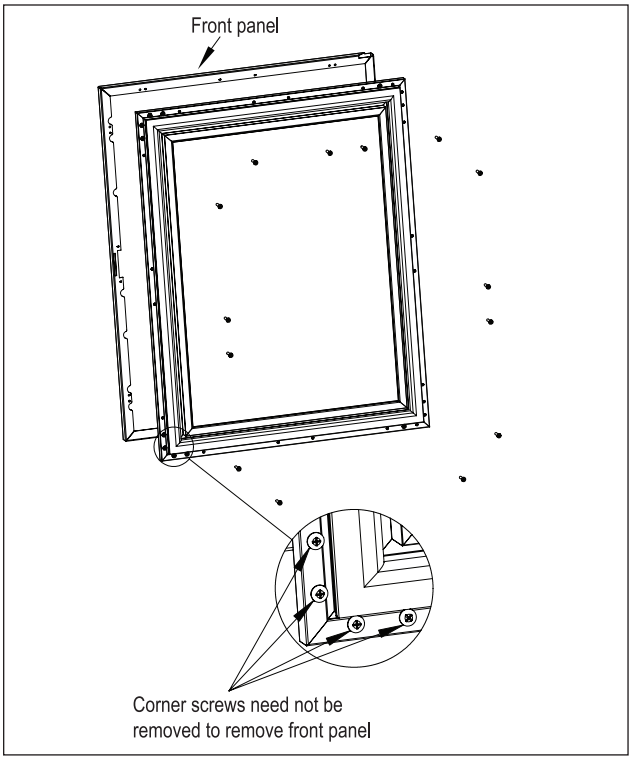

Figure 7: Removing Front Panel

8. Insert bearing into door top hinge bracket (Figure 8).

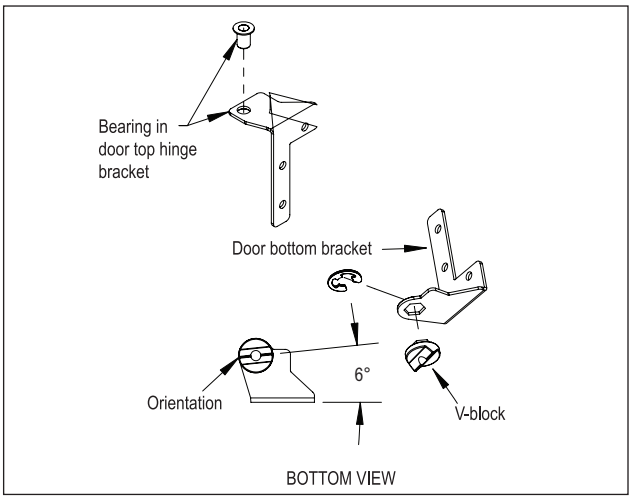

Figure 8: Bearing and V-Block

9. Insert V-block into door bottom hinge bracket and attach with e-clip (Figure 8). Note the orientation of the V-block.
10. Attach the top and bottom door hinges using screws removed in step 6 (Figure 9).

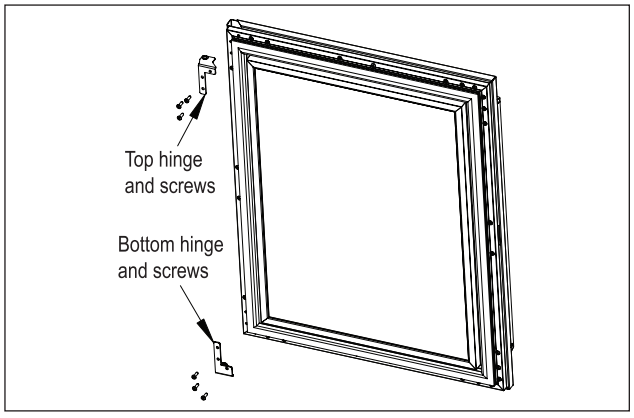

Figure 9: Door Hinges

11. Place lower V-block into lower cabinet hinge with notch parallel to cabinet (Figure 10).

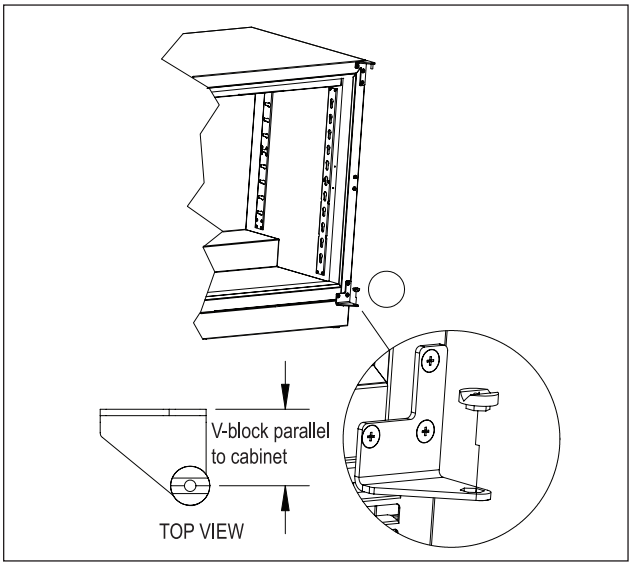

Figure 10: Installing V-Block

12. Lift door assembly and insert top pin into bearing. Move door toward cabinet and align V-blocks (Figure 11).

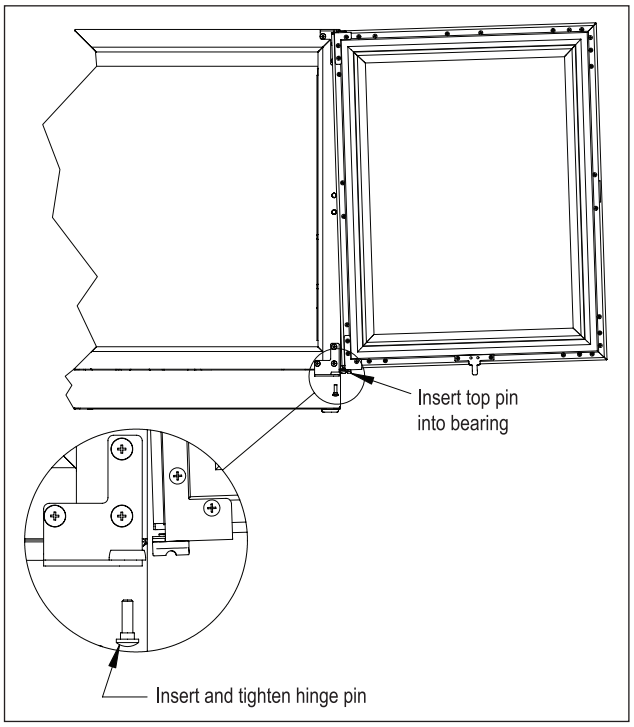

Figure 11: Installing Door

13. Insert and tighten lower hinge pin to complete assembly.

Shelving Adjustment

See Figure 12.

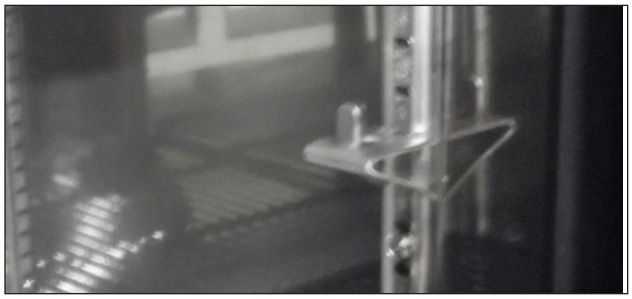

Figure 12: Shelf Bracket

⚠ CAUTION **Completely empty shelf or drawer before removing.**

1. Open the door. Tilt the shelf and remove it from the unit
2. Reposition each bracket separately. Grasp the middle of the bracket, pull the front end up and out, then forward to remove it.
3. Place brackets at desired location and reinstall shelf(s)

Drawer Dividers Adjustment

See Figure 13.

⚠ CAUTION **Completely empty shelf or drawer before removing.**

Lift divider straight up and move to desired position,engaging tabs in holes. Make sure divider tabs engage corresponding holes on both sides.

Figure 13: Drawer Divider Adjustment

Sliding Doors

Removing/Installing

1. To remove the sliding door, simply grasp the door on each side and lift up off the bottom track, then tilt outwards and pull down to remove from the upper track.
2. To reinstall sliding door, place door in upper track making sure to engage the bracket (Figure 4), lift door up into the track and place into the bottom track.

Figure 14: Removing/Installing Sliding Door

Adjusting Door Spring Tension

A tension spring is located in the upper track of each door. To increase or decrease spring tension, remove the Phillips screw and position the bracket in one of three detentes and reinstall screw. The detente farthest to the left creates the least amount of tension.

NOTE: Units are shipped from the factory with springs set at the weakest settings.

Sliding Door Lock

Each set of sliding doors is equipped with a keyed lock located on the bottom of the right side door. To lock the doors, place the lock lever in the “DOWN” position and lock with the key. Unlock with the key and place the lever in the “UP” position to open.

MAINTENANCE

⚠ DANGER Never attempt to repair or perform maintenance on the unit until the main electrical power to the unit has been disconnected!

⚠ WARNING Take caution when handling, moving and using the product to avoid damaging the refrigerant tubing or increasing the risk of a leak.

LED Light Replacement

See Figure 15.

1. Open the door, or remove the upper drawer (see Removing Drawer, Figure 16).

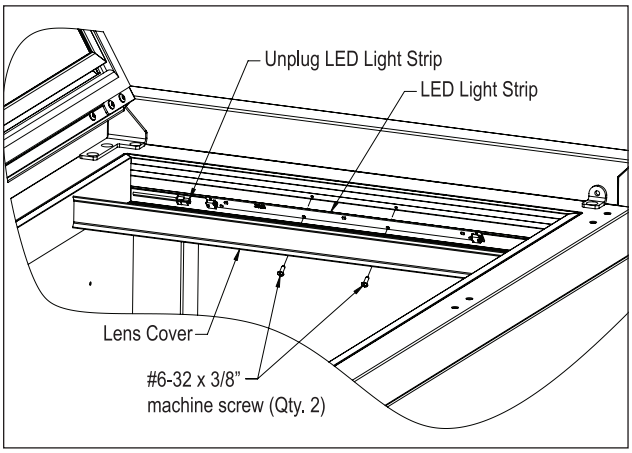

Figure 15: Interior LED Light

2. Using a flat blade screwdriver, carefully pry off the lens cover.

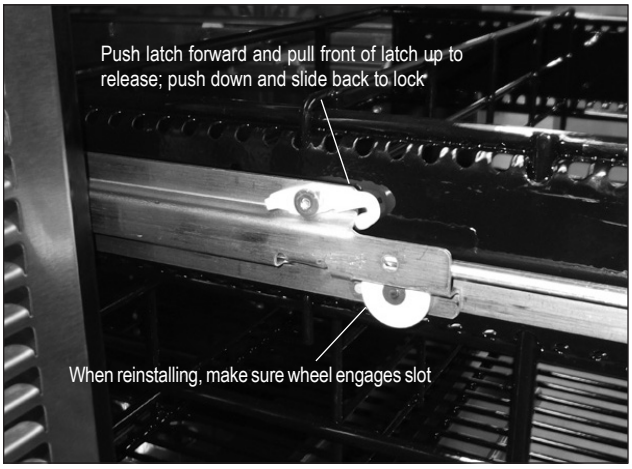

Figure 16: Removing/Installing Drawer

3. Remove the two screws securing LED light to housing.
4. Unplug the LED from the wiring harness.
5. Plug new LED into harness and secure to housing using screws removed in step 2.
6. Snap LED cover into place.

Cleaning/Lubricating Drawer Extenders

Drawer must be removed to clean or lubricate the extenders. Use a food grade lubricant to lubricate the drawer extenders.

Removing Drawer

See Figure 15.

⚠ CAUTION Completely empty drawer before removing.

1. Pull the drawer out to its furthest position. Locate the latch in the middle of both extenders. Push each latch forward and lift front of latch up (unlocked position), then lift the front of the drawer and pull out.

Installing Drawer

1. Place drawer on to the extenders, making sure wheels engage the slots on each side.
2. Push drawer all the way in, then pull drawer out and push the latch down and back to engage. Make sure front of latches are fully down and back, engaging the extenders.

Stainless Steel Care & Cleaning

General

Contrary to popular belief, stainless steel is susceptible to rusting. Corrosion on metals is everywhere. It is recognized quickly on iron and steel as unsightly yellow/orange rust. Such metals are called “active” because they actively corrode in a natural environment when their atoms combine with oxygen.

Stainless steel is a “passive” metal because it contains other metals like chromium, nickel and manganese that stabilize the atoms. Chromium provides an invisible passive film that covers the steel surface acting as a shield against corrosion. As long as the film is intact and not contaminated, the metal is passive and stainless. If the passive film of stainless steel has been broken, equipment starts to corrode and rust.

There are three basic things which can break down stainless steel's passive layer and allow corrosion to occur:

- Mechanical abrasion
- Deposits and water
- Chlorides

Mechanical abrasion refers to the things that will scratch a steel surface. Steel pads, wire brushes and scrapers are prime examples.

Water comes out of the faucet in varying degrees of hardness. Depending on what part of the country you live in, you may have hard or soft water. Hard water may leave spots. When allowed to sit, these deposits will break down the passive layer and rust stainless steel. Other deposits from food preparation must be promptly removed with an appropriate cleaning agent.

Chlorides are found nearly everywhere. They are in water, food and table salt. Household and industrial cleaners are the worst offenders.

Preventing Stainless Steel Rust

Use the proper tools. Use non-abrasive tools to clean stainless steel products. Soft cloths and plastic scouring pads will not harm the steel's passive layer.

Clean with polish lines. Some stainless steels come with visible polishing lines or "grain". When visible lines are present, always scrub in a motion parallel to the lines. When the grain cannot be seen, play it safe and do not use a circular motion. Polish in a consistent straight pattern.

Use alkaline, alkaline chlorinated or non-chloride containing cleaners. While many traditional cleaners are loaded with chlorides, the industry is providing an ever-increasing choice on non-chloride cleaners. If you are not sure of chloride content in the cleaner being used, contact your cleaner supplier. If your present cleaner contains chlorides, ask your supplier if they have an alternative. Avoid cleaners containing quaternary salt; it also can attack stainless steel and cause pitting and rusting.

Keep food equipment clean. Use alkaline chlorinated or non-chloride cleaners at recommended strength. Clean frequently to avoid build-up of hard, stubborn stains. The single most likely cause of damage is chlorides in the water. Remember, adding heat to cleaners that contain chlorides dramatically increases their effect on stainless steel.

Rinse, rinse, rinse! If chlorinated cleaners are used, immediately rinse and wipe equipment and supplies dry. The sooner you wipe standing water, especially when it contains cleaning agents, the better. After wiping equipment down, allow it to air dry. Oxygen helps maintain the stainless steel passive film.

Cleaning Cabinet Interior/Exterior

⚠ CAUTION NEVER use hydrochloric acid (muriatic acid) on stainless steel. Do not use abrasive cleansers or cloths on any interior or exterior surfaces or removable parts.

Glass panels may be cleaned using any standard glass cleaner available on the market.

To clean interior and exterior non-metallic surfaces and removable parts, wash with a mild solution of soap and lukewarm water with a little baking soda. Rinse and dry thoroughly. Avoid getting water on lights, controller and fan motors.

Cleaning the Condenser

⚠ DANGER Flammable Refrigerant. Risk of fire or explosion. Do not damage refrigeration tubes.

The condenser (located behind front grille cover) should be cleaned every three (3) months. Use a soft bristle brush and vacuum to remove the dust and lint.

⚠ CAUTION Avoid damaging or crushing the condenser fins or tubing. Failure to follow this procedure may damage the compressor and void the warranty.

Recommended Cleaners for Specific Situations

Job	Cleaning Agent	Comments
Routine cleaning.	Soap, ammonia, detergent	Apply with sponge or soft cloth.
Fingerprints and smears.	Areal 20, Lac-O-Nu, Lumin Wash, O'Ceder Cream Polish	Provides barrier film to minimize fingerprints. Can be used on all finishes. Rub the surface with a cloth as directed on the package.
Stubborn stains and discolorations.	AllChem Concentrated Cleaner, Samae, Twinkle, Cameo Copper Cleaners, Grade FFF Italian Pumice Whiting, Steel Bright, Lumin Cleaner, Zud Restoro, Sta-Clean, Highlite Cooper's Stainless Steel Cleaner or Revere Stainless Steel Cleaner.	Apply with a damp sponge or cloth, then rinse with clear water and wipe dry.
	Old Dutch, Lighthouse Sunbrite, Wyandotte Bab-O, gold Dust, Sapollo, Bon Ami or Comet.	For these household cleaners, rub with a damp cloth. They may contain chlorine bleaches so rinse thoroughly after use and wipe dry
	Liquid NuSteel or Dubois Temp	For these products, rub the surface with a dry cloth using only a small amount of cleanser. Rinse with water and dry.
Heat tint or heavy discoloration.	Penny-Brite, Copper Brite, Paste Nu-Steel, Dubois Temp or Tarnite	Rinse and rub onto surface with a dry cloth.
	Bar Keepers Friend, Revere Stainless Steel Cleaner, Allen Polish, Steel Bright Wyandotte Bab-O or Zud.	When using these cleaners, apply with a damp sponge or cloth, rinse thoroughly and wipe dry.
Tenacious deposits, rust, discoloration, industrial atmospheric stains.	Oakite No. 33 Dilac, Texo NY, Flash-Klenz Caddy Cleaner, Turco Scale 4368 or Permag 57.	Use Swab and soak with a clean cloth. Let stand for 15 minutes or more according to directions on package then rinse and wipe dry.
Rust discoloration or corrosion caused by cleaning agents containing hydrochloric (muriatic) acid or chlorine bleach	3M Scotch Brite pad, type A Grade "Fine"	Clean off the surface soil using cleaning methods above. Then rub discolored or corroded areas lightly with dry pad.

Use of property names is intended only to indicate a type of cleaner and does not constitute an endorsement. Omission of any proprietary cleaner does not imply its inadequacy. All products should be used in strict accordance with instructions on the package.
NOTE: Do not use steel wool or scouring pads to clean stainless steel.

TROUBLESHOOTING

Before Calling For Service

If the unit appears to be malfunctioning, read through the Operation section in this manual first. If the problem persists, check through this troubleshooting section. Locate the problem and refer to the cause and remedy before calling for service. The problem could be something that can be solved without a service call.

⚠ DANGER **Never attempt to repair or perform maintenance on the unit until the main electrical power to the unit has been disconnected!**

Problem	Cause	Solution
No interior light.	Rocker switch in Off position.	Turn switch on.
	LED board inoperable.	Contact your selling dealer.
Light stays on when door is closed.	Manual switch on.	Turn manual switch off.
Noisy operation.	Soft sounds from compressor, fan motor and valves heard.	Normal operation.
LED Controller display is flashing “E1”.	Thermostat probe failure.	Contact your selling dealer.
Unit is not running.	No power to the unit. Condenser dirty.	Home circuit breaker tripped. Reset circuit breaker. ON/OFF keypad is off. Turn on. Clean the condenser.
Compartments are warmer than usual.	Control preset not set properly. Light staying on. Condenser dirty or obstructed. Door is open or has been opened more frequently lately. Internal louvers and/or fan guard obstructed. Warm product placed in cabinet recently.	Reset compartments presets. Turn manual light switch off. Clean condenser and clear obstruction. Wait 24 hours and recheck temperature. Reset preset temperature if necessary. Make sure louvers and/or fan is not obstructed.
System runs for long period of time.	Condenser dirty or obstructed. Door kept open for long time or opened more frequently. Warm product place in cabinet recently. Hot day and warm room temperature.	Clean condenser and clear obstruction. Wait 24 hours and recheck temperature. Reset preset temperature if necessary. Normal for system to run more frequently.
Condensation forms inside the compartments.	High humidity and/or frequent door opening. Door not closing and sealing properly.	Normal operation. Make sure door is closing properly. Check door seals and replace if necessary.
Condensation forms on outside of unit.	High humidity and/or frequent door opening. Door not closing and sealing properly.	Normal operation. Make sure door is closing properly. Check door seals and replace if necessary. If condensation persists, contact your selling dealer.

For Product Information

- Contact your selling dealer.
- Inquire via the web at www.perlick.com
- Call (800) 558-5592 for factory assistance on planning installation or product information.
- Write to Perlick Corporation, Customer Service Department, 8300 West Good Hope Road, Milwaukee, WI 53223.
- Email us at warrantyserv@perlick.com.

For Product Service

- Check the model and serial number of your unit located on the label attached to the inside top of the cabinet.
- Inquire via the web at www.perlick.com, or call (800) 558-5592.

For Replacement Parts and Accessories

- Use only genuine Perlick replacement parts and accessories. Genuine Perlick parts and accessories are designed to work correctly with Perlick products and offer superior service life. The use of non-Perlick parts can damage the unit and may void the warranty.
- Check the model and serial number of your unit which is located on the right or left interior panel. Call your Perlick Factory Authorized Service Center.
- Inquire via the web at www.perlick.com, or call (800) 558-5592.

Genuine Perlick replacement parts and accessories have been tested and approved for use with flammable refrigerants to prevent hazardous conditions.

DIMENSIONS

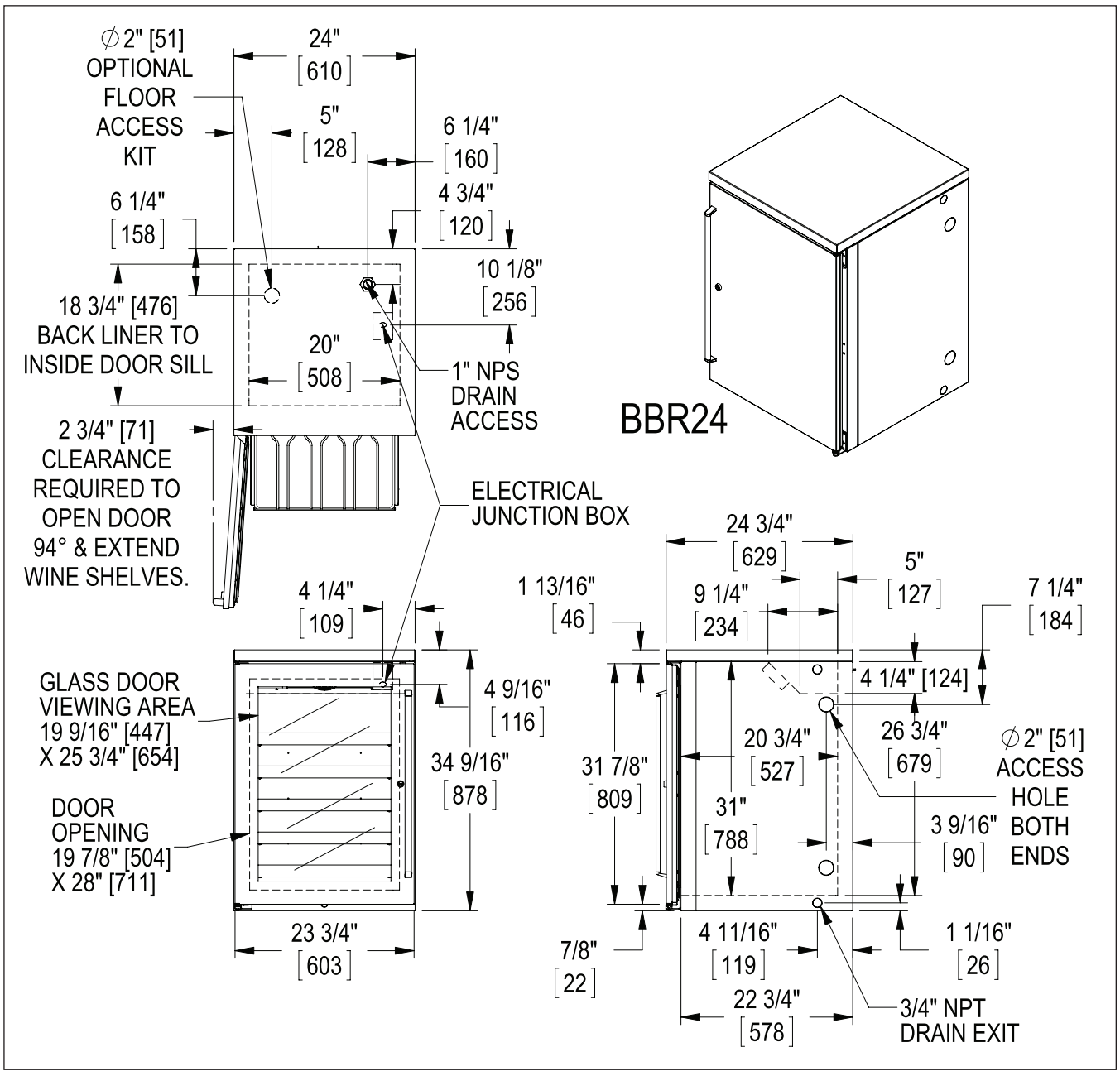
∅2" [51]
OPTIONAL
FLOOR
ACCESS
KIT
24"
[610]
5"
[128]
6 1/4"
[160]
4 3/4"
[120]
6 1/4"
[158]
10 1/8"
[256]
18 3/4" [476]
BACK LINER TO
INSIDE DOOR SILL
20"
[508]
1" NPS
DRAIN
ACCESS
BBR24
2 3/4" [71]
CLEARANCE
REQUIRED TO
OPEN DOOR
94° & EXTEND
WINE SHELVES.
ELECTRICAL
JUNCTION BOX
4 1/4"
[109]
GLASS DOOR
VIEWING AREA
19 9/16" [447]
X 25 3/4" [654]
4 9/16"
[116]
34 9/16"
[878]
DOOR
OPENING
19 7/8" [504]
X 28" [711]
23 3/4"
[603]
24 3/4"
[629]
1 13/16"
[46]
9 1/4"
[234]
5"
[127]
7 1/4"
[184]
4 1/4" [124]
26 3/4"
[679]
∅2" [51]
ACCESS
HOLE
BOTH
ENDS
20 3/4"
[527]
31 7/8"
[809]
31"
[788]
3 9/16"
[90]
7/8"
[22]
4 11/16"
[119]
1 1/16"
[26]
22 3/4"
[578]
3/4" NPT
DRAIN EXIT

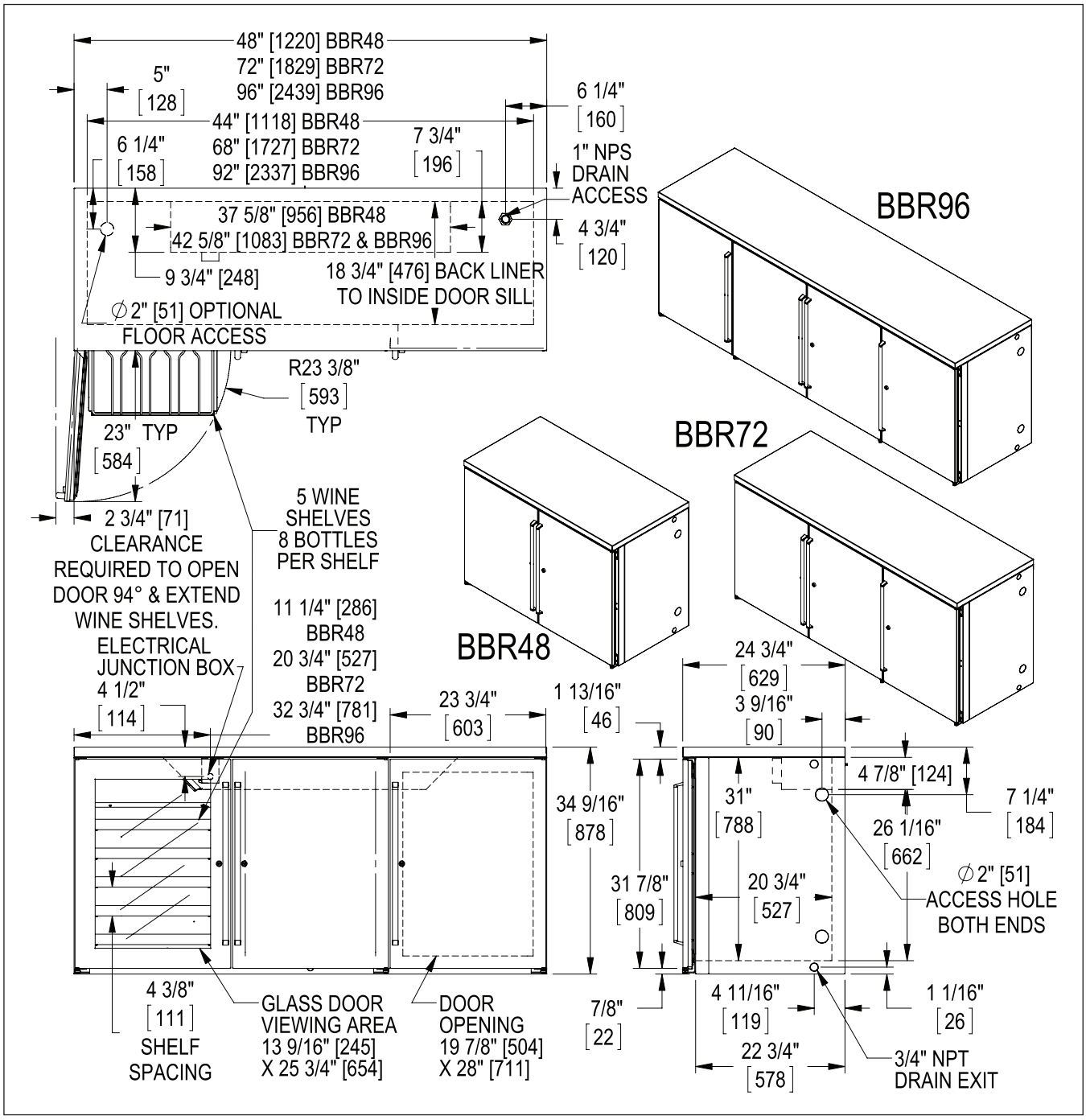
48" [1220] BBR48
72" [1829] BBR72
96" [2439] BBR96
5"
[128]
6 1/4"
[160]
44" [1118] BBR48
68" [1727] BBR72
92" [2337] BBR96
6 1/4"
[158]
7 3/4"
[196]
1" NPS
DRAIN
ACCESS
37 5/8" [956] BBR48
42 5/8" [1083] BBR72 & BBR96
4 3/4"
[120]
9 3/4" [248]
18 3/4" [476] BACK LINER
TO INSIDE DOOR SILL
∅2" [51] OPTIONAL
FLOOR ACCESS
R23 3/8"
[593]
TYP
23" TYP
[584]
2 3/4" [71]
CLEARANCE
REQUIRED TO OPEN
DOOR 94° & EXTEND
WINE SHELVES.
5 WINE
SHELVES
8 BOTTLES
PER SHELF
11 1/4" [286]
BBR48
20 3/4" [527]
BBR72
32 3/4" [781]
BBR96
ELECTRICAL
JUNCTION BOX
4 1/2"
[114]
23 3/4"
[603]
1 13/16"
[46]
34 9/16"
[878]
4 3/8"
[111]
SHELF
SPACING
GLASS DOOR
VIEWING AREA
13 9/16" [245]
X 25 3/4" [654]
DOOR
OPENING
19 7/8" [504]
X 28" [711]
7/8"
[22]
BBR96
BBR72
BBR48
24 3/4"
[629]
3 9/16"
[90]
4 7/8" [124]
7 1/4"
[184]
31"
[788]
26 1/16"
[662]
31 7/8"
[809]
20 3/4"
[527]
∅2" [51]
ACCESS HOLE
BOTH ENDS
4 11/16"
[119]
1 1/16"
[26]
22 3/4"
[578]
3/4" NPT
DRAIN EXIT

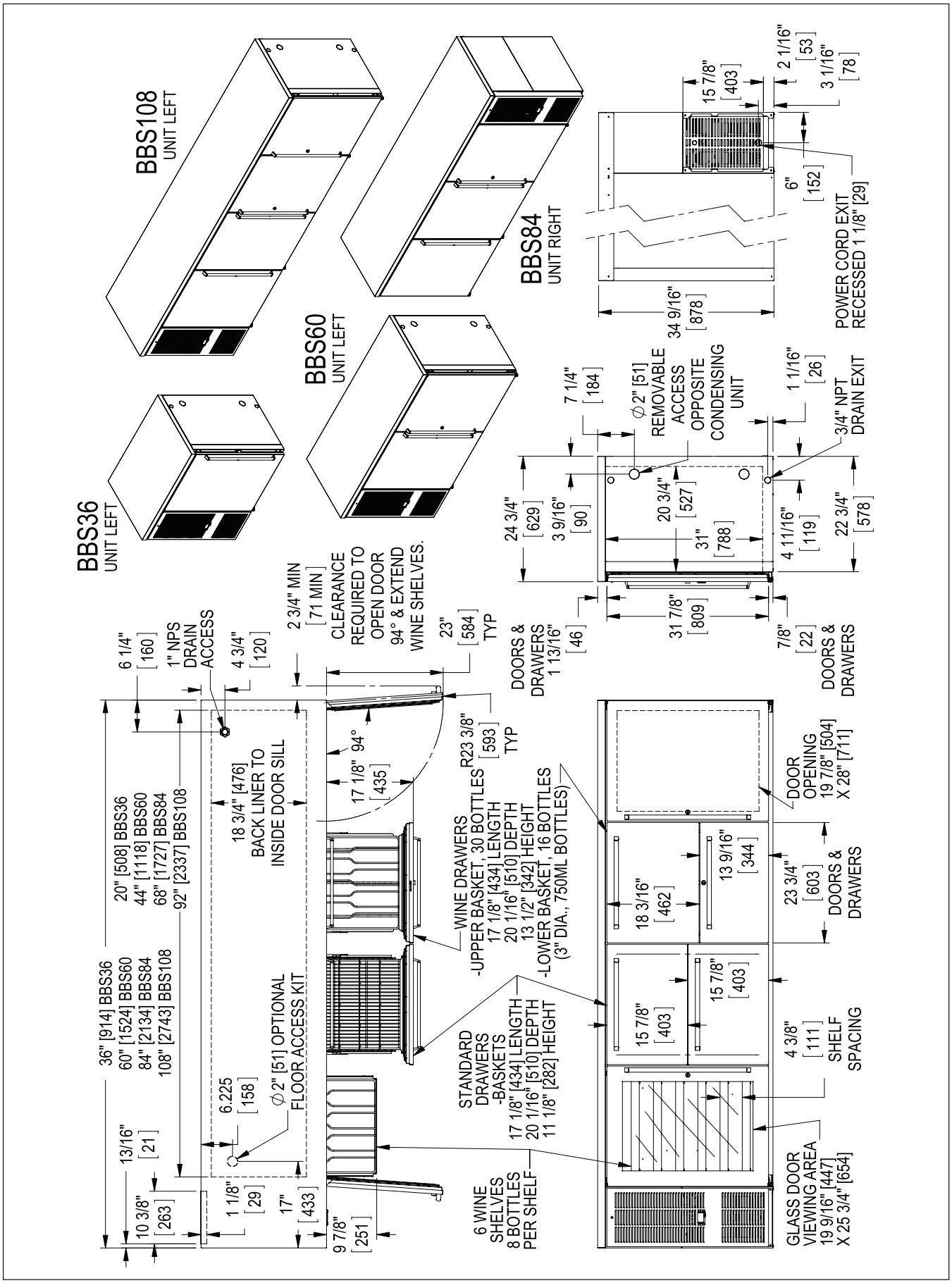
BBS108
UNIT LEFT
BBS84
UNIT RIGHT
BBS60
UNIT LEFT
BBS36
UNIT LEFT
15 7/8" [403]
2 1/16" [53]
3 1/16" [78]
6" [152]
POWER CORD EXIT
RECESSED 1 1/8" [29]
34 9/16" [878]
7 1/4" [184]
Ø2" [51] REMOVABLE ACCESS OPPOSITE CONDENSING UNIT
1 1/16" [26]
3/4" NPT DRAIN EXIT
24 3/4" [629]
3 9/16" [90]
20 3/4" [527]
31" [788]
4 11/16" [119]
22 3/4" [578]
31 7/8" [809]
DOORS & DRAWERS 1 13/16" [46]
7/8" [22]
DOORS & DRAWERS
6 1/4" [160]
1" NPS DRAIN ACCESS
4 3/4" [120]
2 3/4" MIN [71 MIN] CLEARANCE REQUIRED TO OPEN DOOR 94° & EXTEND WINE SHELVES.
23" [584] TYP
R23 3/8" [593] TYP
17 1/8" 94° [435]
18 3/4" [476] BACK LINER TO INSIDE DOOR SILL
WINE DRAWERS
-UPPER BASKET, 30 BOTTLES
17 1/8" [434] LENGTH
20 1/16" [510] DEPTH
13 1/2" [342] HEIGHT
-LOWER BASKET, 16 BOTTLES
(3" DIA., 750ML BOTTLES)
DOOR OPENING
19 7/8" [504]
X 28" [711]
18 3/16" [462]
13 9/16" [344]
23 3/4" [603]
DOORS & DRAWERS
36" [914] BBS36
60" [1524] BBS60
84" [2134] BBS84
108" [2743] BBS108
20" [508] BBS36
44" [1118] BBS60
68" [1727] BBS84
92" [2337] BBS108
13/16" [21]
10 3/8" [263]
6.225 [158]
Ø2" [51] OPTIONAL FLOOR ACCESS KIT
1 1/8" [29]
17" [433]
9 7/8" [251]
STANDARD DRAWERS -BASKETS
17 1/8" [434] LENGTH
20 1/16" [510] DEPTH
11 1/8" [282] HEIGHT
15 7/8" [403]
15 7/8" [403]
4 3/8" [111] SHELF SPACING
6 WINE SHELVES 8 BOTTLES PER SHELF
GLASS DOOR VIEWING AREA
19 9/16" [447]
X 25 3/4" [654]

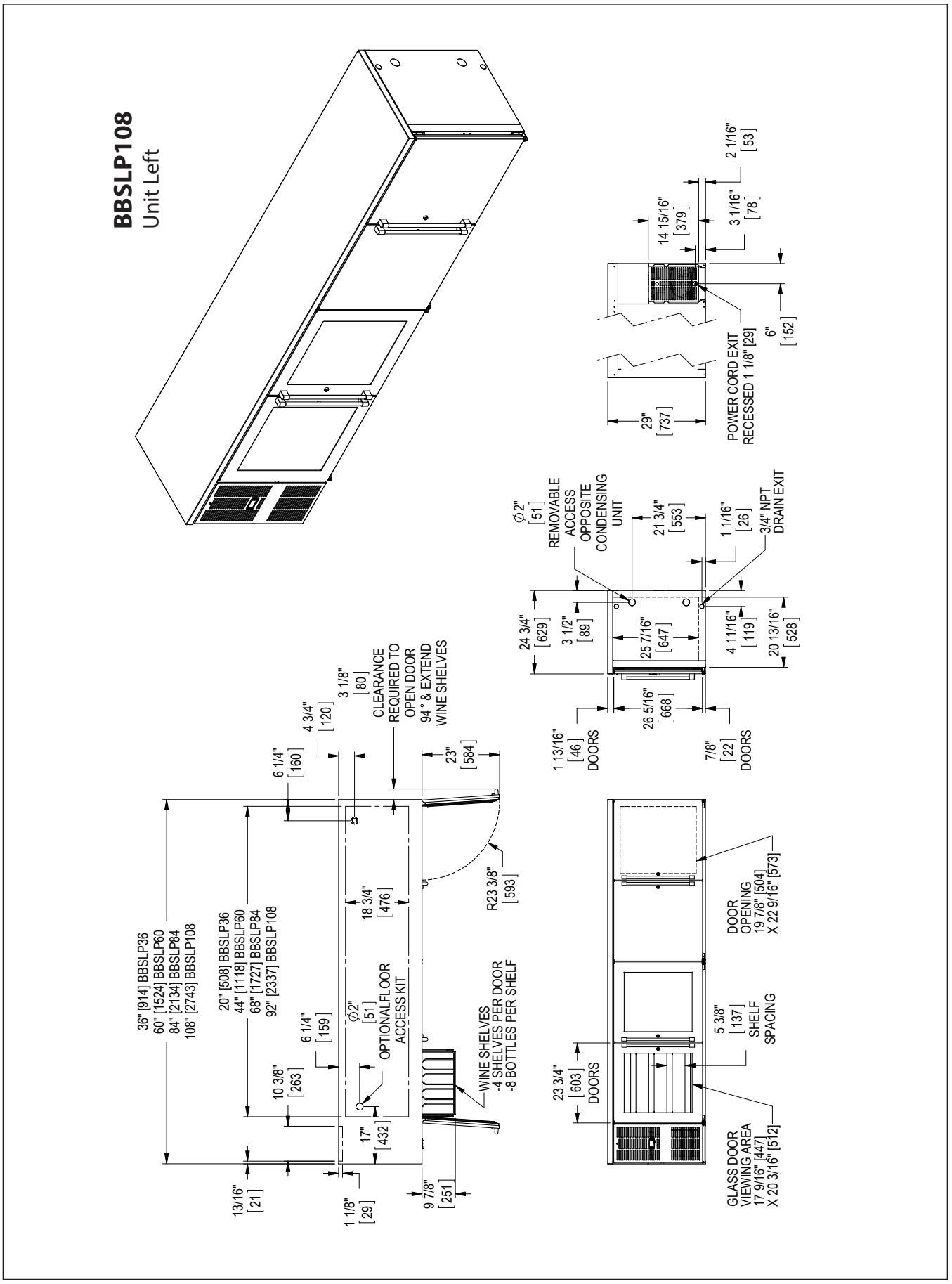
BBSLP108
Unit Left
2 1/16" [53]
3 1/16" [78]
14 15/16" [379]
6" [152]
POWER CORD EXIT RECESSED 1 1/8" [29]
29" [737]
Ø2" [51] REMOVABLE ACCESS OPPOSITE CONDENSING UNIT
21 3/4" [553]
1 1/16" [26]
3/4" NPT DRAIN EXIT
24 3/4" [629]
3 1/2" [89]
25 7/16" [647]
4 11/16" [119]
20 13/16" [528]
26 5/16" [668]
1 13/16" [46] DOORS
7/8" [22] DOORS
4 3/4" [120]
3 1/8" [80]
CLEARANCE REQUIRED TO OPEN DOOR 94° & EXTEND WINE SHELVES
6 1/4" [160]
23" [584]
R23 3/8" [593]
36" [914] BBSLP36
60" [1524] BBSLP60
84" [2134] BBSLP84
108" [2743] BBSLP108
20" [508] BBSLP36
44" [1118] BBSLP60
68" [1727] BBSLP84
92" [2337] BBSLP108
18 3/4" [476]
6 1/4" [159]
Ø2" [51] OPTIONALFLOOR ACCESS KIT
10 3/8" [263]
WINE SHELVES -4 SHELVES PER DOOR -8 BOTTLES PER SHELF
17" [432]
13/16" [21]
1 1/8" [29]
9 7/8" [251]
DOOR OPENING 19 7/8" [504] X 22 9/16" [573]
5 3/8" [137] SHELF SPACING
23 3/4" [603] DOORS
GLASS DOOR VIEWING AREA 17 9/16" [447] X 20 3/16" [512]

BBRLP72

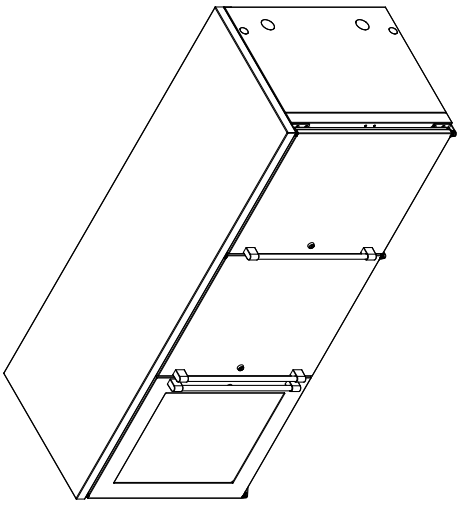

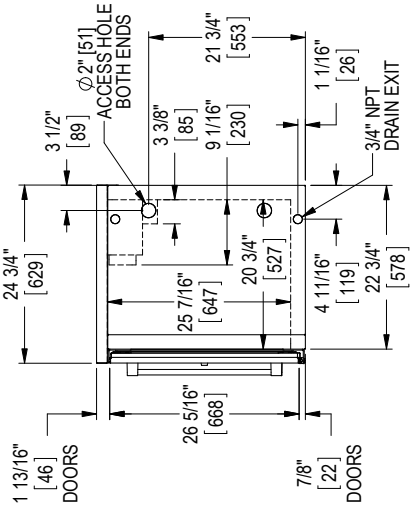
3 1/2" [89]
Ø2" [51] ACCESS HOLE BOTH ENDS
3 3/8" [85]
9 1/16" [230]
21 3/4" [553]
1 1/16" [26]
3/4" NPT DRAIN EXIT
24 3/4" [629]
25 7/16" [647]
20 3/4" [527]
4 11/16" [119]
22 3/4" [578]
1 13/16" [46] DOORS
26 5/16" [668]
7/8" [22] DOORS

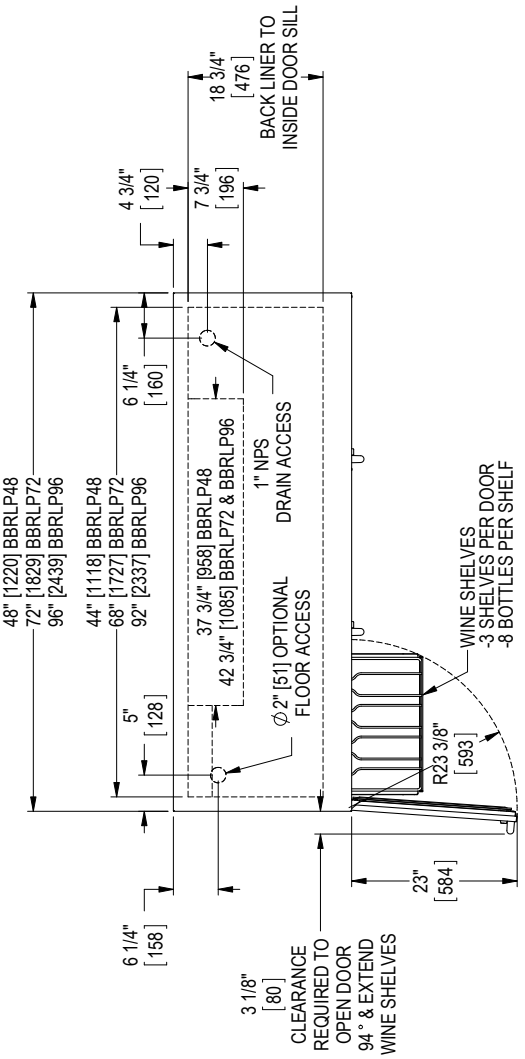
BACK LINER TO INSIDE DOOR SILL
18 3/4" [476]
4 3/4" [120]
7 3/4" [196]
48" [1220] BBRLP48
72" [1829] BBRLP72
96" [2439] BBRLP96
44" [1118] BBRLP48
68" [1727] BBRLP72
92" [2337] BBRLP96
6 1/4" [160]
37 3/4" [958] BBRLP48
42 3/4" [1085] BBRLP72 & BBRLP96
1" NPS DRAIN ACCESS
5" [128]
Ø2" [51] OPTIONAL FLOOR ACCESS
WINE SHELVES
-3 SHELVES PER DOOR
-8 BOTTLES PER SHELF
R23 3/8" [593]
23" [584]
6 1/4" [158]
3 1/8" [80]
CLEARANCE REQUIRED TO OPEN DOOR 94 ° & EXTEND WINE SHELVES

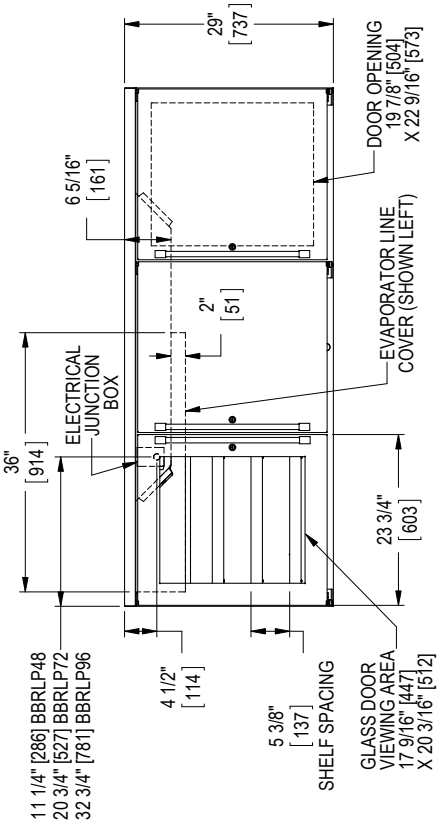
29" [737]
DOOR OPENING
19 7/8" [504]
X 22 9/16" [573]
6 5/16" [161]
2" [51]
EVAPORATOR LINE COVER (SHOWN LEFT)
ELECTRICAL JUNCTION BOX
36" [914]
23 3/4" [603]
11 1/4" [286] BBRLP48
20 3/4" [527] BBRLP72
32 3/4" [781] BBRLP96
4 1/2" [114]
5 3/8" [137]
SHELF SPACING
GLASS DOOR VIEWING AREA
17 9/16" [447]
X 20 3/16" [512]

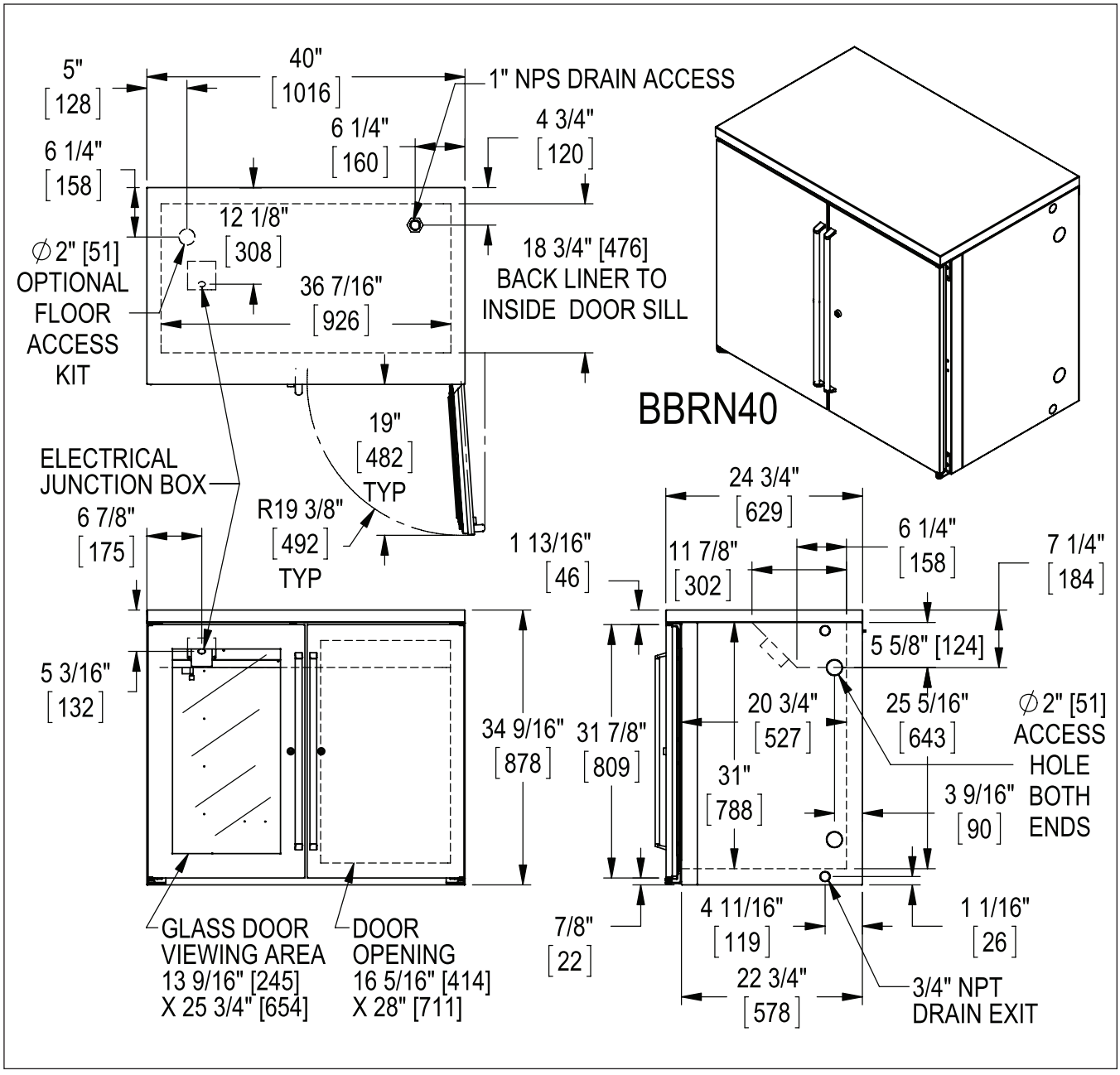
5"
[128]
40"
[1016]
1" NPS DRAIN ACCESS
6 1/4"
[158]
6 1/4"
[160]
4 3/4"
[120]
12 1/8"
[308]
∅2" [51]
OPTIONAL
FLOOR
ACCESS
KIT
36 7/16"
[926]
18 3/4" [476]
BACK LINER TO
INSIDE DOOR SILL
BBRN40
19"
[482]
TYP
ELECTRICAL
JUNCTION BOX
6 7/8"
[175]
R19 3/8"
[492]
TYP
24 3/4"
[629]
1 13/16"
[46]
11 7/8"
[302]
6 1/4"
[158]
7 1/4"
[184]
5 5/8" [124]
5 3/16"
[132]
34 9/16"
[878]
31 7/8"
[809]
20 3/4"
[527]
25 5/16"
[643]
∅2" [51]
ACCESS
HOLE
BOTH
ENDS
31"
[788]
3 9/16"
[90]
7/8"
[22]
4 11/16"
[119]
1 1/16"
[26]
22 3/4"
[578]
3/4" NPT
DRAIN EXIT
GLASS DOOR
VIEWING AREA
13 9/16" [245]
X 25 3/4" [654]
DOOR
OPENING
16 5/16" [414]
X 28" [711]

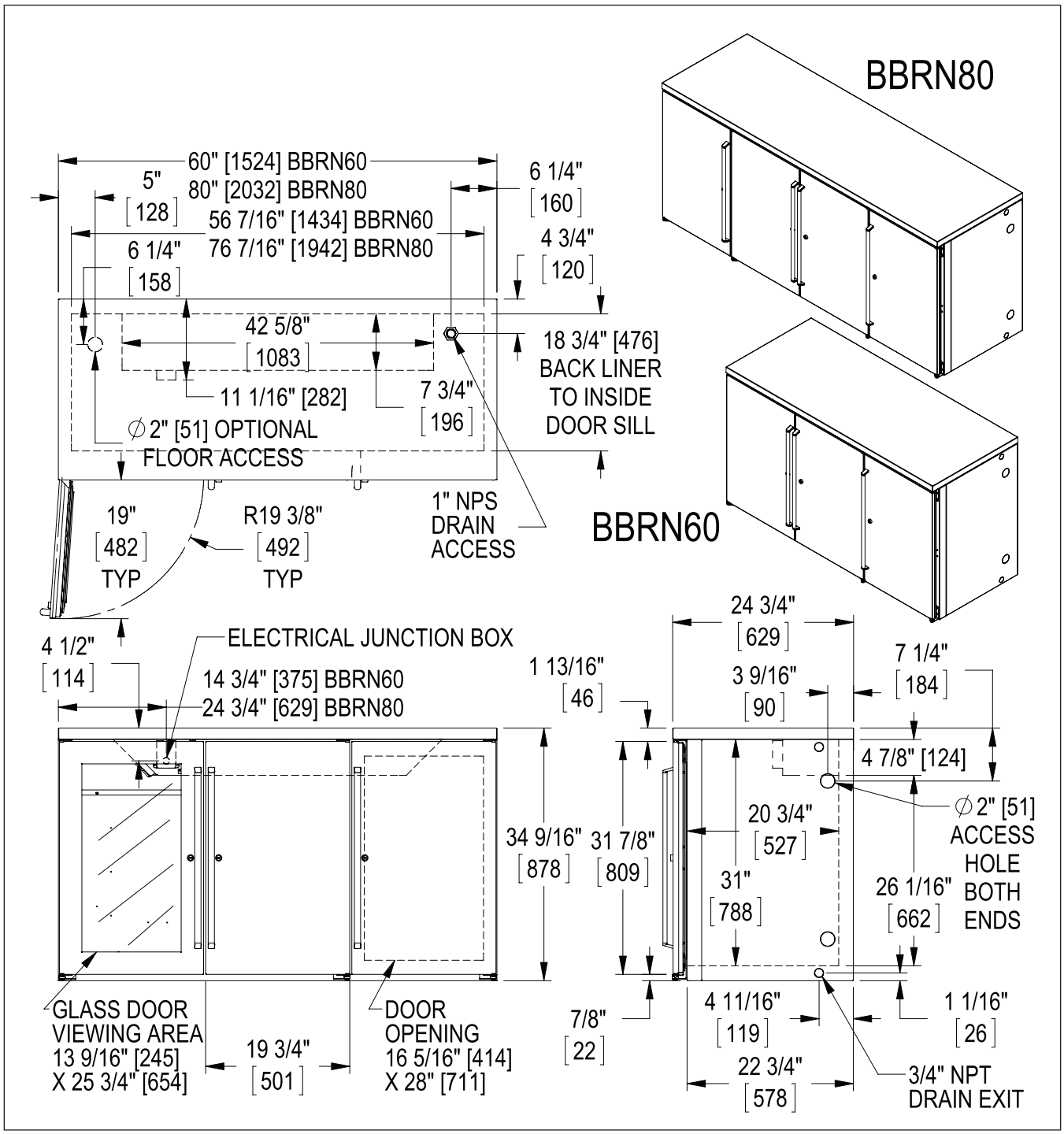
BBRN80
BBRN60
60" [1524] BBRN60
80" [2032] BBRN80
56 7/16" [1434] BBRN60
76 7/16" [1942] BBRN80
5" [128]
6 1/4" [158]
6 1/4" [160]
4 3/4" [120]
42 5/8" [1083]
11 1/16" [282]
7 3/4" [196]
∅2" [51] OPTIONAL FLOOR ACCESS
18 3/4" [476] BACK LINER TO INSIDE DOOR SILL
19" [482] TYP
R19 3/8" [492] TYP
1" NPS DRAIN ACCESS
4 1/2" [114]
ELECTRICAL JUNCTION BOX
14 3/4" [375] BBRN60
24 3/4" [629] BBRN80
34 9/16" [878]
GLASS DOOR VIEWING AREA 13 9/16" [245] X 25 3/4" [654]
19 3/4" [501]
DOOR OPENING 16 5/16" [414] X 28" [711]
24 3/4" [629]
1 13/16" [46]
3 9/16" [90]
7 1/4" [184]
4 7/8" [124]
∅2" [51] ACCESS HOLE BOTH ENDS
20 3/4" [527]
31 7/8" [809]
31" [788]
26 1/16" [662]
7/8" [22]
4 11/16" [119]
1 1/16" [26]
22 3/4" [578]
3/4" NPT DRAIN EXIT

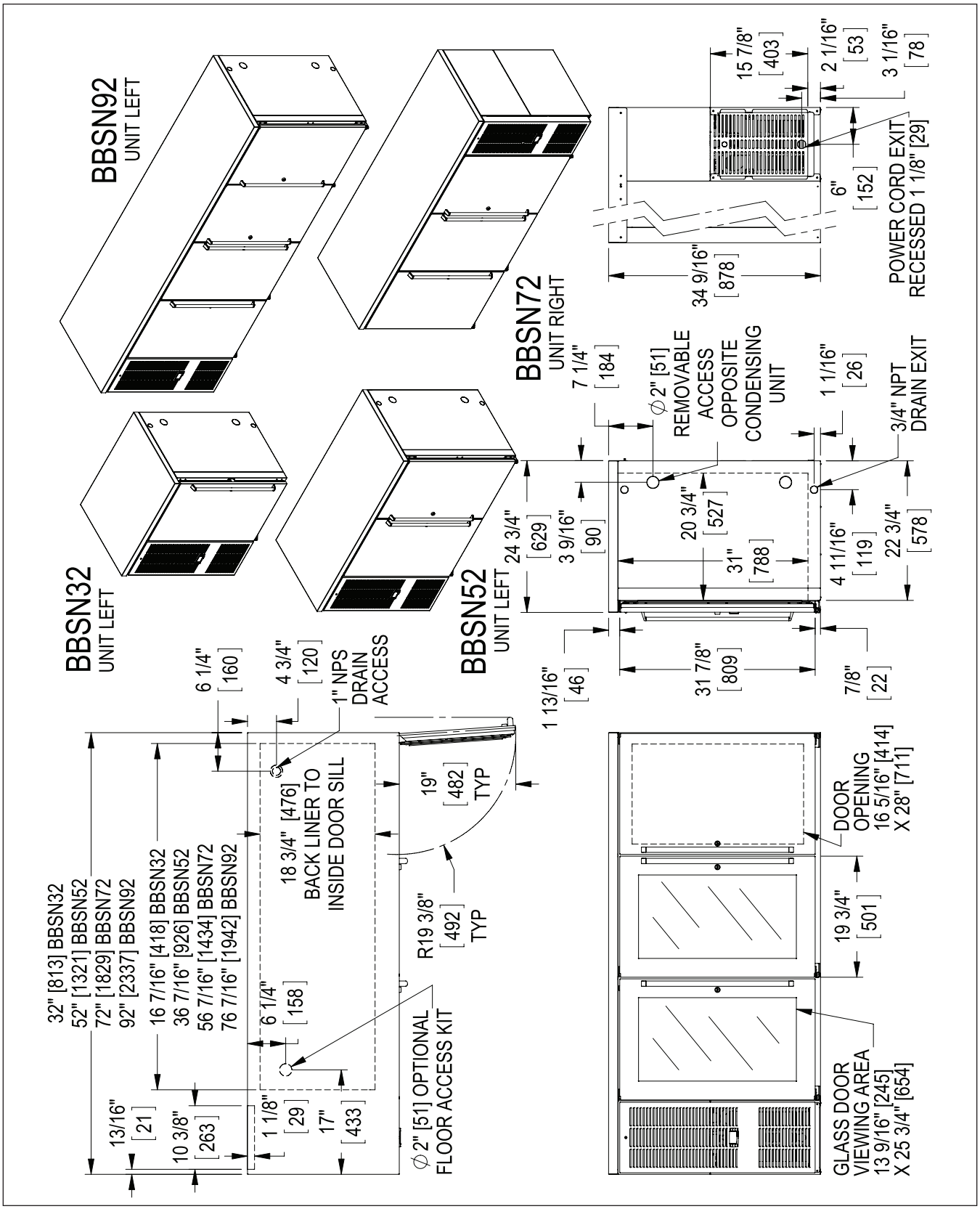
BBSN92
UNIT LEFT
BBSN72
UNIT RIGHT
BBSN32
UNIT LEFT
BBSN52
UNIT LEFT
15 7/8" [403]
2 1/16" [53]
3 1/16" [78]
6" [152]
34 9/16" [878]
POWER CORD EXIT
RECESSED 1 1/8" [29]
7 1/4" [184]
Ø 2" [51] REMOVABLE ACCESS OPPOSITE CONDENSING UNIT
1 1/16" [26]
3/4" NPT DRAIN EXIT
24 3/4" [629]
3 9/16" [90]
20 3/4" [527]
31" [788]
4 11/16" [119]
22 3/4" [578]
1 13/16" [46]
31 7/8" [809]
7/8" [22]
6 1/4" [160]
4 3/4" [120]
1" NPS DRAIN ACCESS
18 3/4" [476] BACK LINER TO INSIDE DOOR SILL
19" [482] TYP
R19 3/8" [492] TYP
32" [813] BBSN32
52" [1321] BBSN52
72" [1829] BBSN72
92" [2337] BBSN92
16 7/16" [418] BBSN32
36 7/16" [926] BBSN52
56 7/16" [1434] BBSN72
76 7/16" [1942] BBSN92
6 1/4" [158]
1 1/8" [29]
17" [433]
13/16" [21]
10 3/8" [263]
Ø 2" [51] OPTIONAL FLOOR ACCESS KIT
DOOR OPENING 16 5/16" [414] X 28" [711]
19 3/4" [501]
GLASS DOOR VIEWING AREA 13 9/16" [245] X 25 3/4" [654]

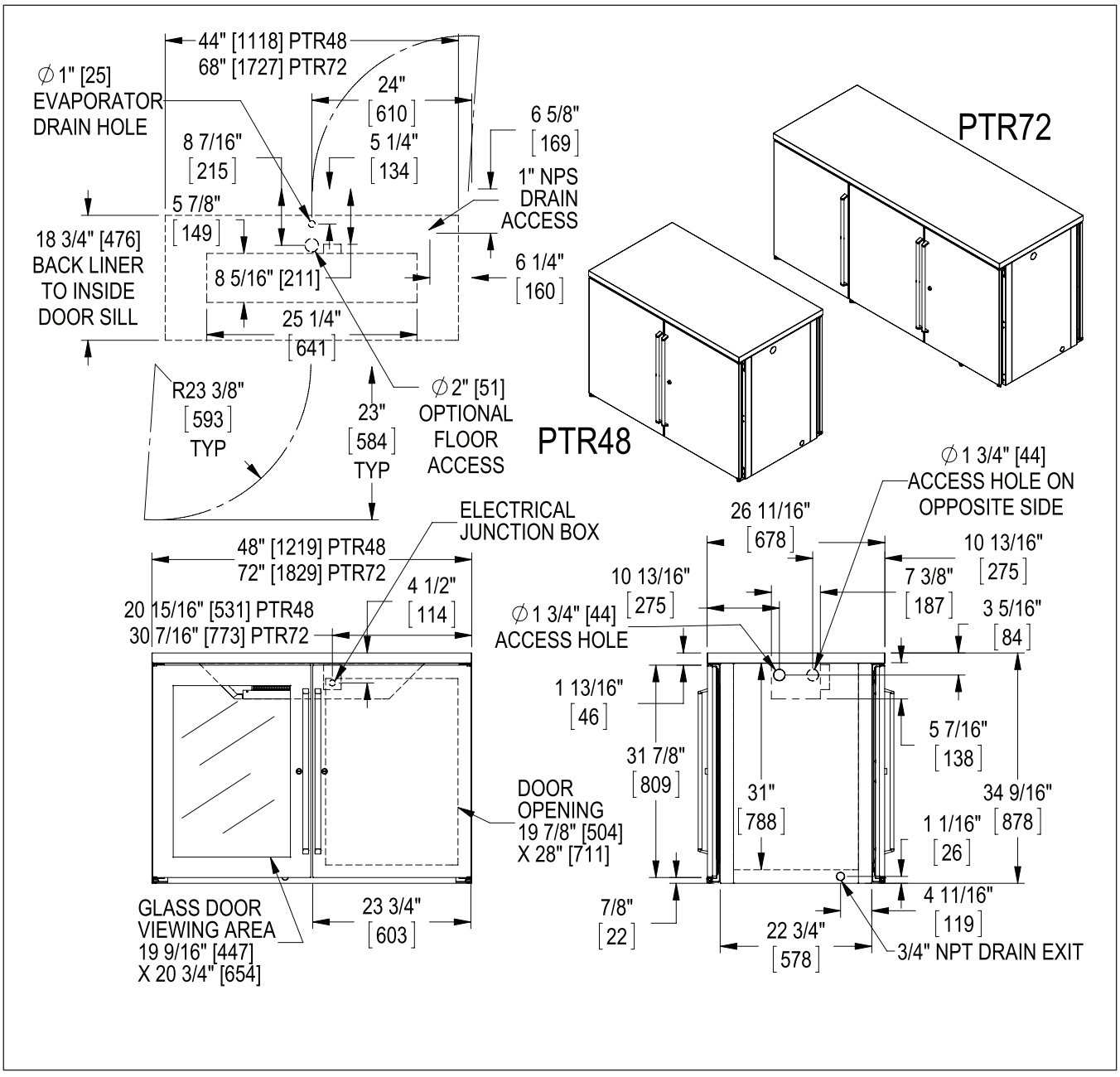
44" [1118] PTR48
68" [1727] PTR72
∅1" [25]
EVAPORATOR
DRAIN HOLE
24"
[610]
6 5/8"
[169]
8 7/16"
[215]
5 1/4"
[134]
1" NPS
DRAIN
ACCESS
5 7/8"
[149]
18 3/4" [476]
BACK LINER
TO INSIDE
DOOR SILL
8 5/16" [211]
6 1/4"
[160]
25 1/4"
[641]
R23 3/8"
[593]
TYP
23"
[584]
TYP
∅2" [51]
OPTIONAL
FLOOR
ACCESS
PTR72
PTR48
∅1 3/4" [44]
ACCESS HOLE ON
OPPOSITE SIDE
ELECTRICAL
JUNCTION BOX
26 11/16"
[678]
10 13/16"
[275]
48" [1219] PTR48
72" [1829] PTR72
4 1/2"
[114]
10 13/16"
[275]
7 3/8"
[187]
3 5/16"
[84]
20 15/16" [531] PTR48
30 7/16" [773] PTR72
∅1 3/4" [44]
ACCESS HOLE
1 13/16"
[46]
5 7/16"
[138]
31 7/8"
[809]
DOOR
OPENING
19 7/8" [504]
X 28" [711]
31"
[788]
34 9/16"
[878]
1 1/16"
[26]
GLASS DOOR
VIEWING AREA
19 9/16" [447]
X 20 3/4" [654]
23 3/4"
[603]
7/8"
[22]
22 3/4"
[578]
4 11/16"
[119]
3/4" NPT DRAIN EXIT

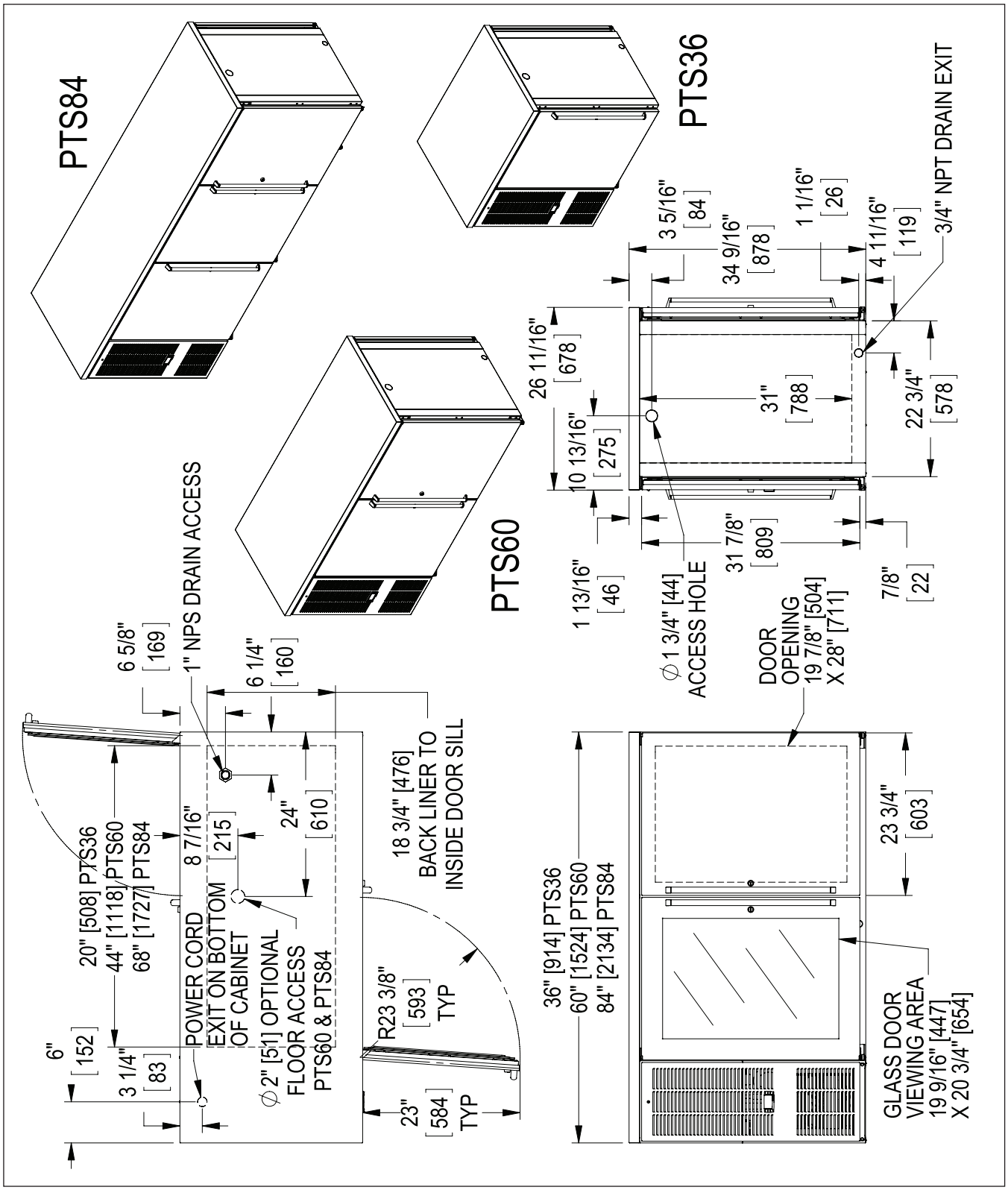
PTS84
PTS60
PTS36
1" NPS DRAIN ACCESS
6 5/8" [169]
6 1/4" [160]
20" [508] PTS36
44" [1118] PTS60
68" [1727] PTS84
8 7/16" [215]
24" [610]
POWER CORD EXIT ON BOTTOM OF CABINET
Ø2" [51] OPTIONAL FLOOR ACCESS PTS60 & PTS84
6" [152]
3 1/4" [83]
18 3/4" [476] BACK LINER TO INSIDE DOOR SILL
R23 3/8" [593] TYP
23" [584] TYP
3 5/16" [84]
34 9/16" [878]
1 1/16" [26]
4 11/16" [119]
3/4" NPT DRAIN EXIT
26 11/16" [678]
10 13/16" [275]
31" [788]
22 3/4" [578]
1 13/16" [46]
Ø1 3/4" [44] ACCESS HOLE
31 7/8" [809]
7/8" [22]
DOOR OPENING 19 7/8" [504] X 28" [711]
36" [914] PTS36
60" [1524] PTS60
84" [2134] PTS84
23 3/4" [603]
GLASS DOOR VIEWING AREA 19 9/16" [447] X 20 3/4" [654]

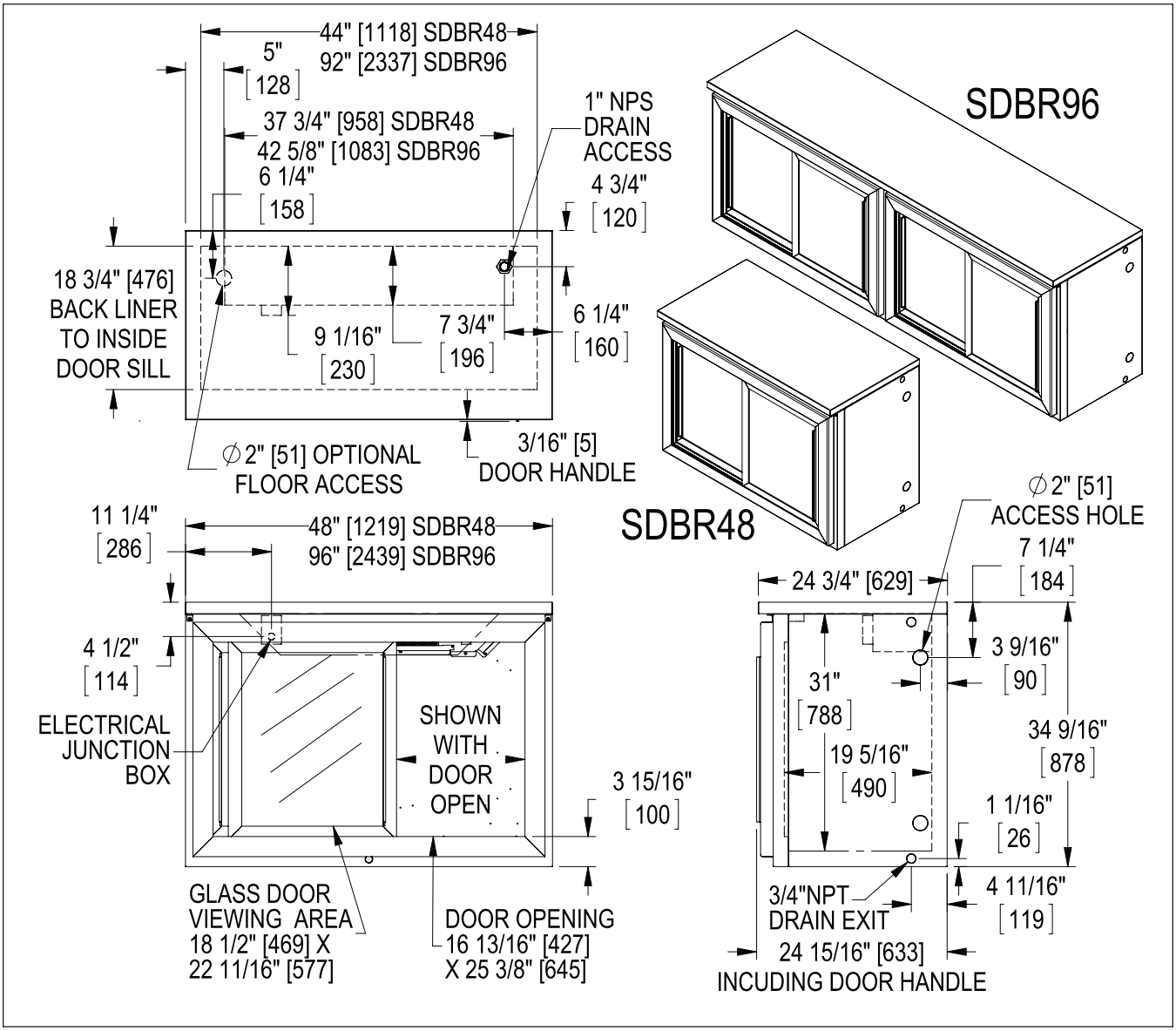
44" [1118] SDBR48
92" [2337] SDBR96
5"
[128]
37 3/4" [958] SDBR48
42 5/8" [1083] SDBR96
6 1/4"
[158]
1" NPS
DRAIN
ACCESS
4 3/4"
[120]
18 3/4" [476]
BACK LINER
TO INSIDE
DOOR SILL
9 1/16"
[230]
7 3/4"
[196]
6 1/4"
[160]
∅2" [51] OPTIONAL
FLOOR ACCESS
3/16" [5]
DOOR HANDLE
SDBR96
SDBR48
11 1/4"
[286]
48" [1219] SDBR48
96" [2439] SDBR96
4 1/2"
[114]
ELECTRICAL
JUNCTION
BOX
SHOWN
WITH
DOOR
OPEN
3 15/16"
[100]
GLASS DOOR
VIEWING AREA
18 1/2" [469] X
22 11/16" [577]
DOOR OPENING
16 13/16" [427]
X 25 3/8" [645]
∅2" [51]
ACCESS HOLE
7 1/4"
[184]
24 3/4" [629]
3 9/16"
[90]
31"
[788]
34 9/16"
[878]
19 5/16"
[490]
1 1/16"
[26]
4 11/16"
[119]
3/4"NPT
DRAIN EXIT
24 15/16" [633]
INCUDING DOOR HANDLE

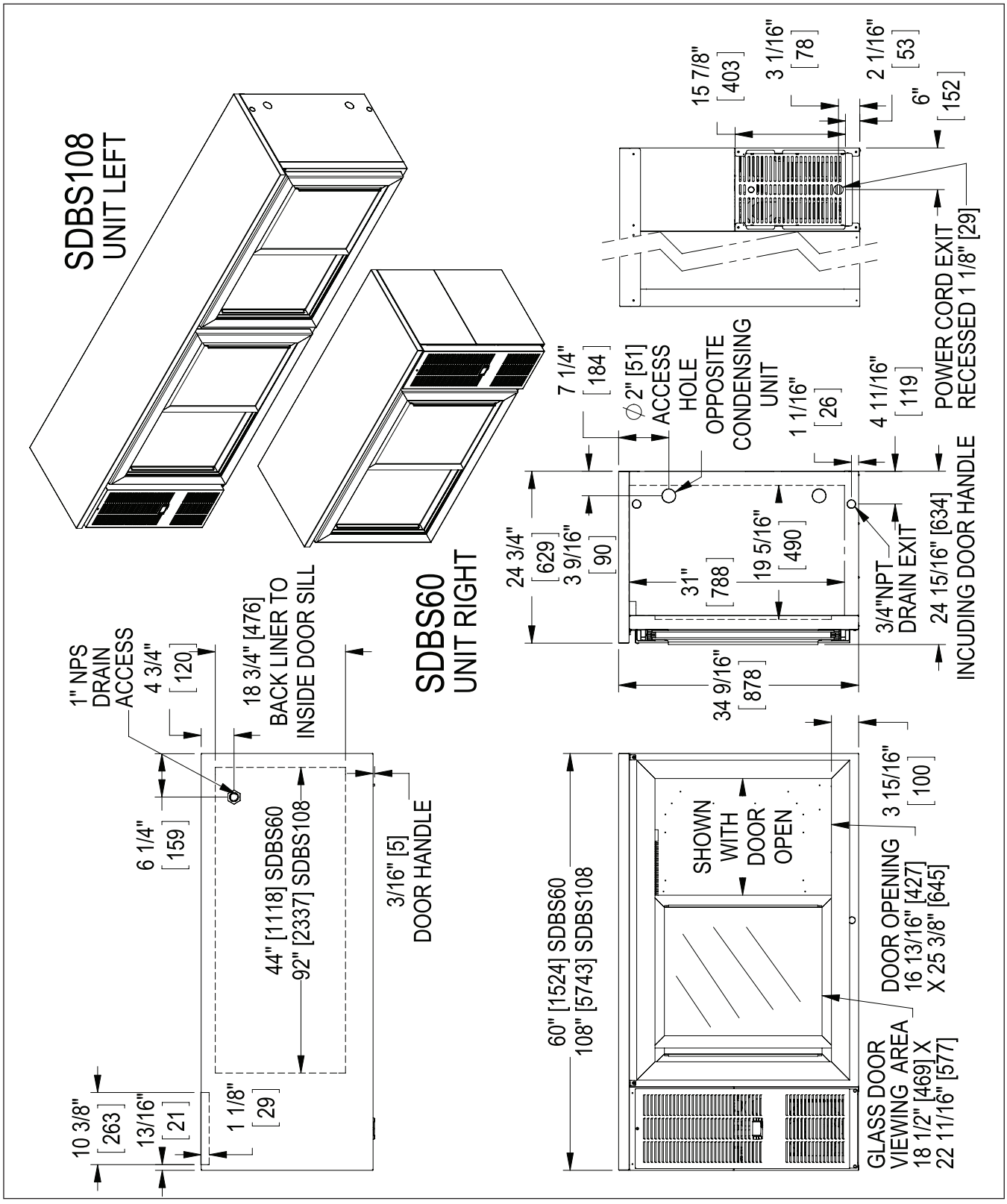
SDBS108
UNIT LEFT
SDBS60
UNIT RIGHT
15 7/8" [403]
3 1/16" [78]
2 1/16" [53]
6" [152]
POWER CORD EXIT
RECESSED 1 1/8" [29]
7 1/4" [184]
Ø2" [51] ACCESS HOLE OPPOSITE CONDENSING UNIT
1 1/16" [26]
4 11/16" [119]
24 3/4" [629]
3 9/16" [90]
31" [788]
19 5/16" [490]
3/4"NPT DRAIN EXIT
24 15/16" [634] INCUDING DOOR HANDLE
34 9/16" [878]
1" NPS DRAIN ACCESS
4 3/4" [120]
18 3/4" [476] BACK LINER TO INSIDE DOOR SILL
6 1/4" [159]
44" [1118] SDBS60
92" [2337] SDBS108
3/16" [5] DOOR HANDLE
10 3/8" [263]
13/16" [21]
1 1/8" [29]
60" [1524] SDBS60
108" [5743] SDBS108
SHOWN WITH DOOR OPEN
3 15/16" [100]
DOOR OPENING
16 13/16" [427]
X 25 3/8" [645]
GLASS DOOR VIEWING AREA
18 1/2" [469] X
22 11/16" [577]

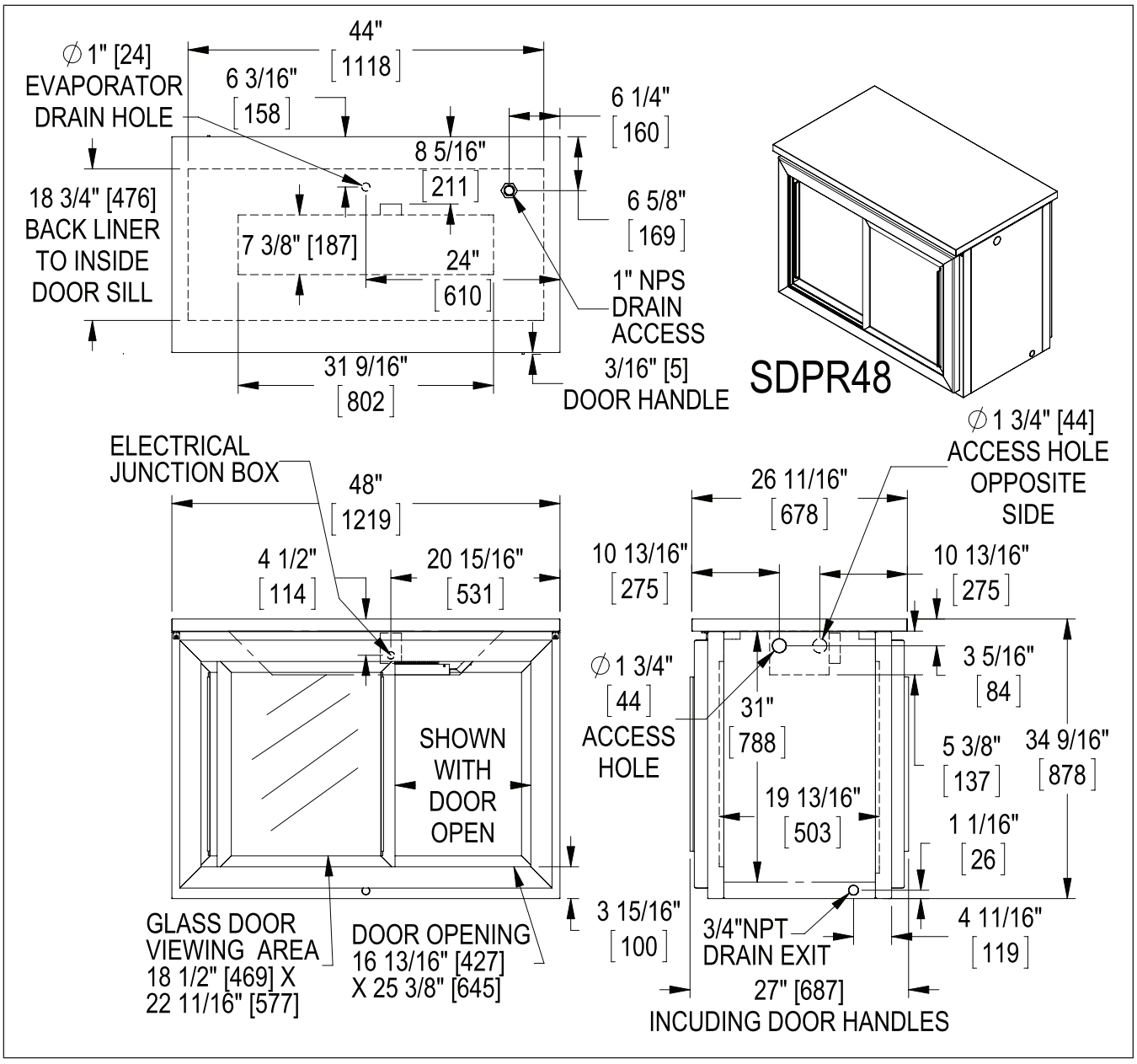
∅1" [24]
EVAPORATOR
DRAIN HOLE
44"
[1118]
6 3/16"
[158]
6 1/4"
[160]
8 5/16"
[211]
6 5/8"
[169]
18 3/4" [476]
BACK LINER
TO INSIDE
DOOR SILL
7 3/8" [187]
24"
[610]
1" NPS
DRAIN
ACCESS
31 9/16"
[802]
3/16" [5]
DOOR HANDLE
SDPR48
ELECTRICAL
JUNCTION BOX
48"
[1219]
4 1/2"
[114]
20 15/16"
[531]
SHOWN
WITH
DOOR
OPEN
GLASS DOOR
VIEWING AREA
18 1/2" [469] X
22 11/16" [577]
DOOR OPENING
16 13/16" [427]
X 25 3/8" [645]
3 15/16"
[100]
∅1 3/4" [44]
ACCESS HOLE
OPPOSITE
SIDE
26 11/16"
[678]
10 13/16"
[275]
10 13/16"
[275]
∅1 3/4"
[44]
ACCESS
HOLE
31"
[788]
3 5/16"
[84]
5 3/8"
[137]
34 9/16"
[878]
19 13/16"
[503]
1 1/16"
[26]
3/4"NPT
DRAIN EXIT
4 11/16"
[119]
27" [687]
INCUDING DOOR HANDLES

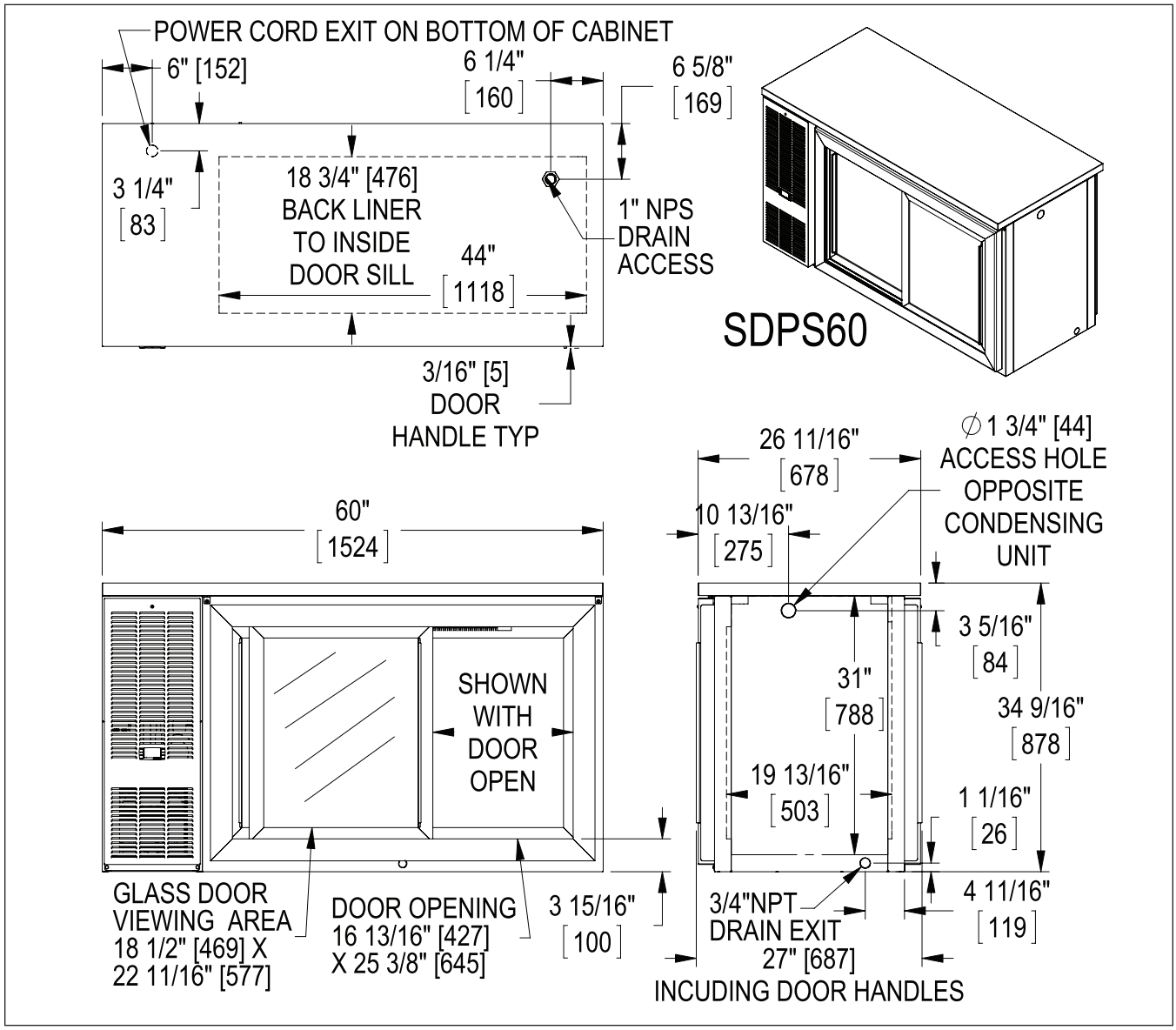
POWER CORD EXIT ON BOTTOM OF CABINET
6" [152]
6 1/4"
[160]
6 5/8"
[169]
3 1/4"
[83]
18 3/4" [476]
BACK LINER
TO INSIDE
DOOR SILL
44"
[1118]
1" NPS
DRAIN
ACCESS
3/16" [5]
DOOR
HANDLE TYP
SDPS60
60"
[1524]
SHOWN
WITH
DOOR
OPEN
GLASS DOOR
VIEWING AREA
18 1/2" [469] X
22 11/16" [577]
DOOR OPENING
16 13/16" [427]
X 25 3/8" [645]
3 15/16"
[100]
26 11/16"
[678]
10 13/16"
[275]
∅1 3/4" [44]
ACCESS HOLE
OPPOSITE
CONDENSING
UNIT
3 5/16"
[84]
31"
[788]
34 9/16"
[878]
19 13/16"
[503]
1 1/16"
[26]
3/4"NPT
DRAIN EXIT
27" [687]
4 11/16"
[119]
INCUDING DOOR HANDLES

36" DUAL ZONE

DZS36
UNIT LEFT
with 4 faucet
Tee Tower.

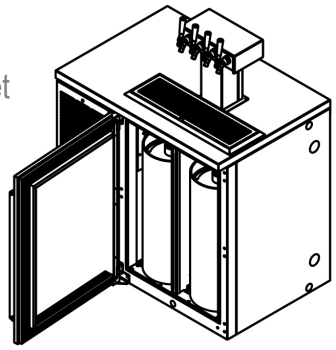

DZS36
UNIT RIGHT
with (2) 2 faucet
Draft Arms.

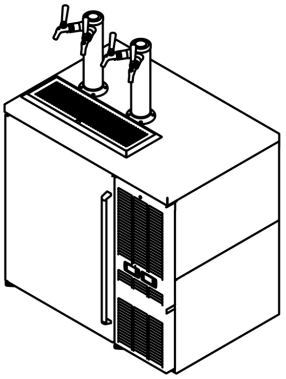

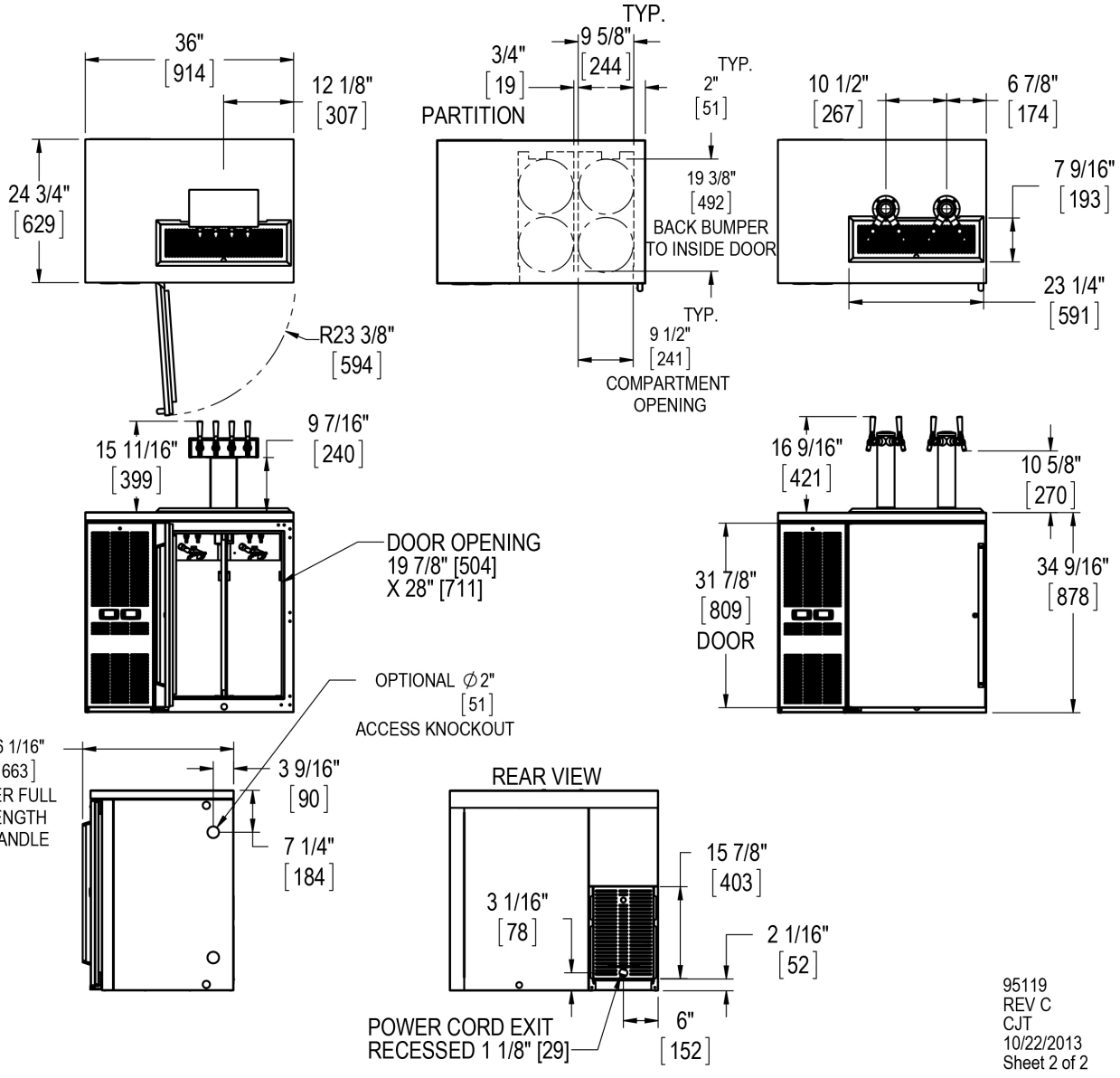

95119
REV C
CJT
10/22/2013
Sheet 2 of 2

60" DUAL ZONE

DZS60
UNIT RIGHT

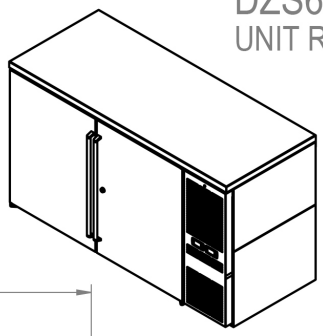

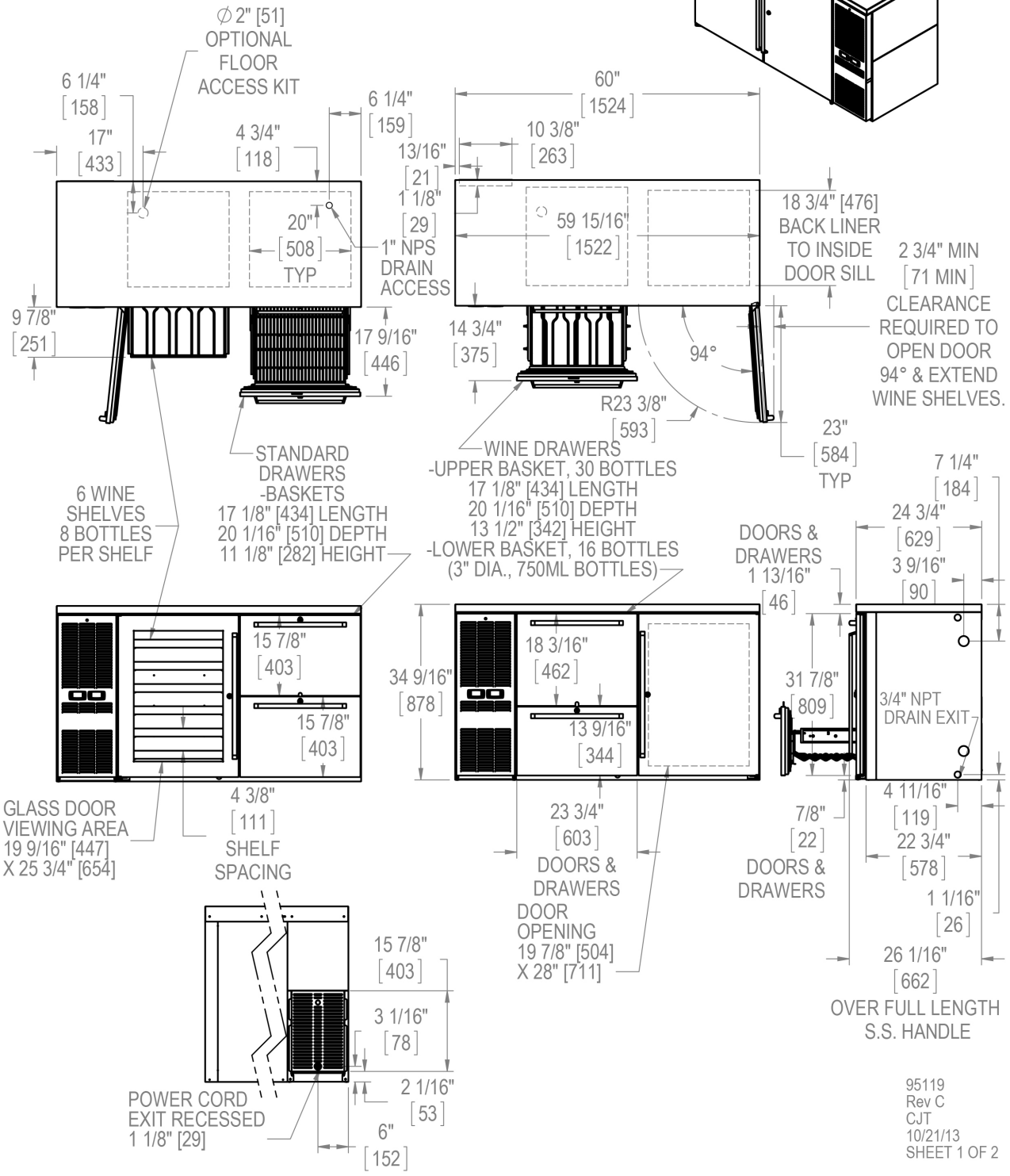

95119
Rev C
CJT
10/21/13
SHEET 1 OF 2

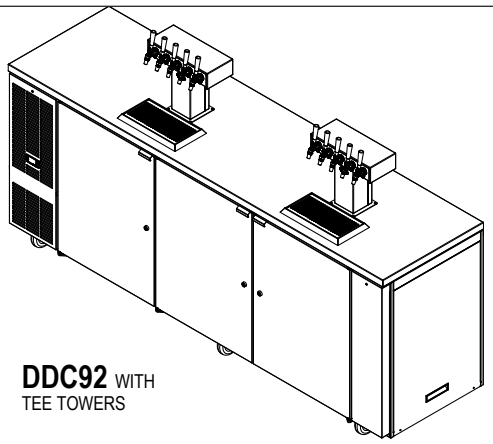

DDC92 WITH
TEE TOWERS

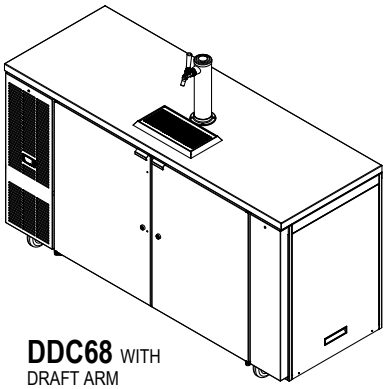

DDC68 WITH
DRAFT ARM

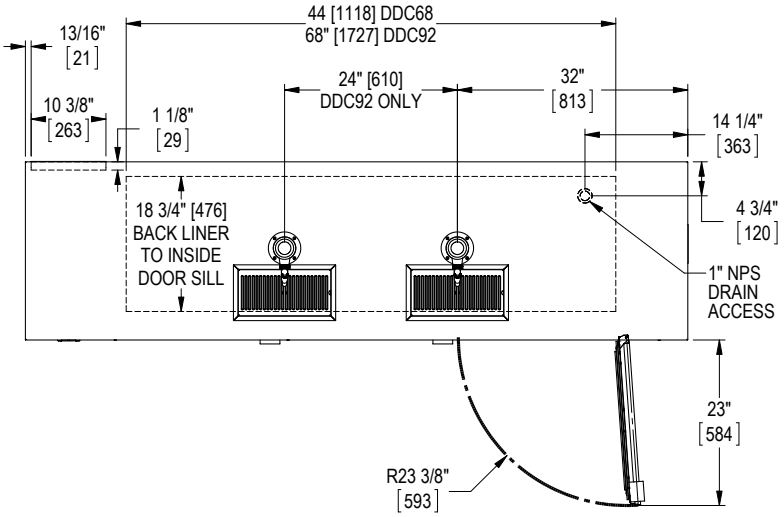

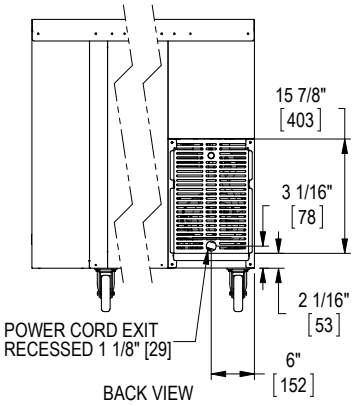

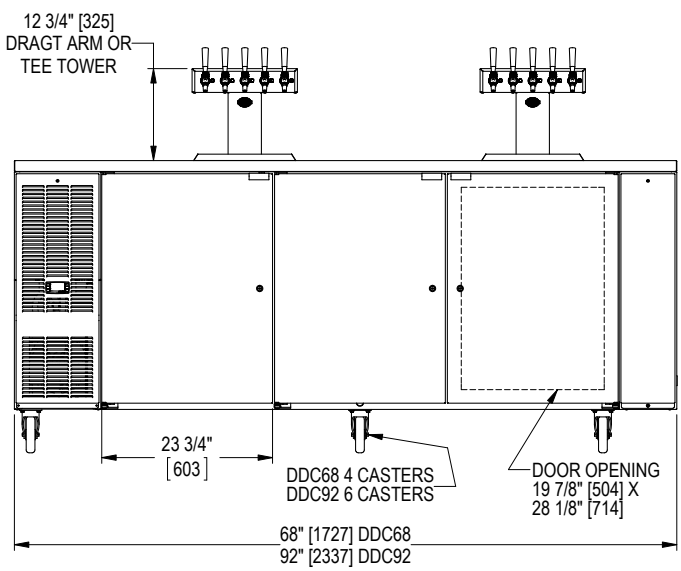

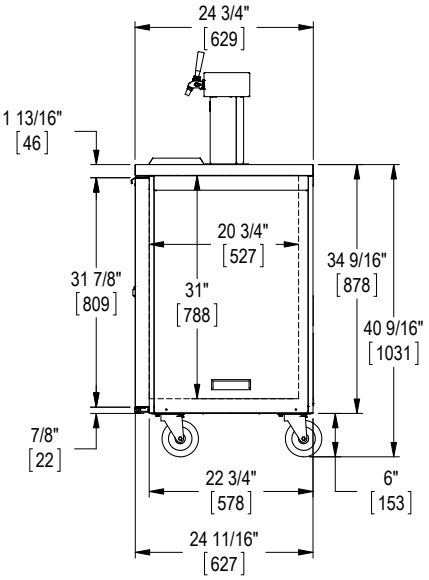

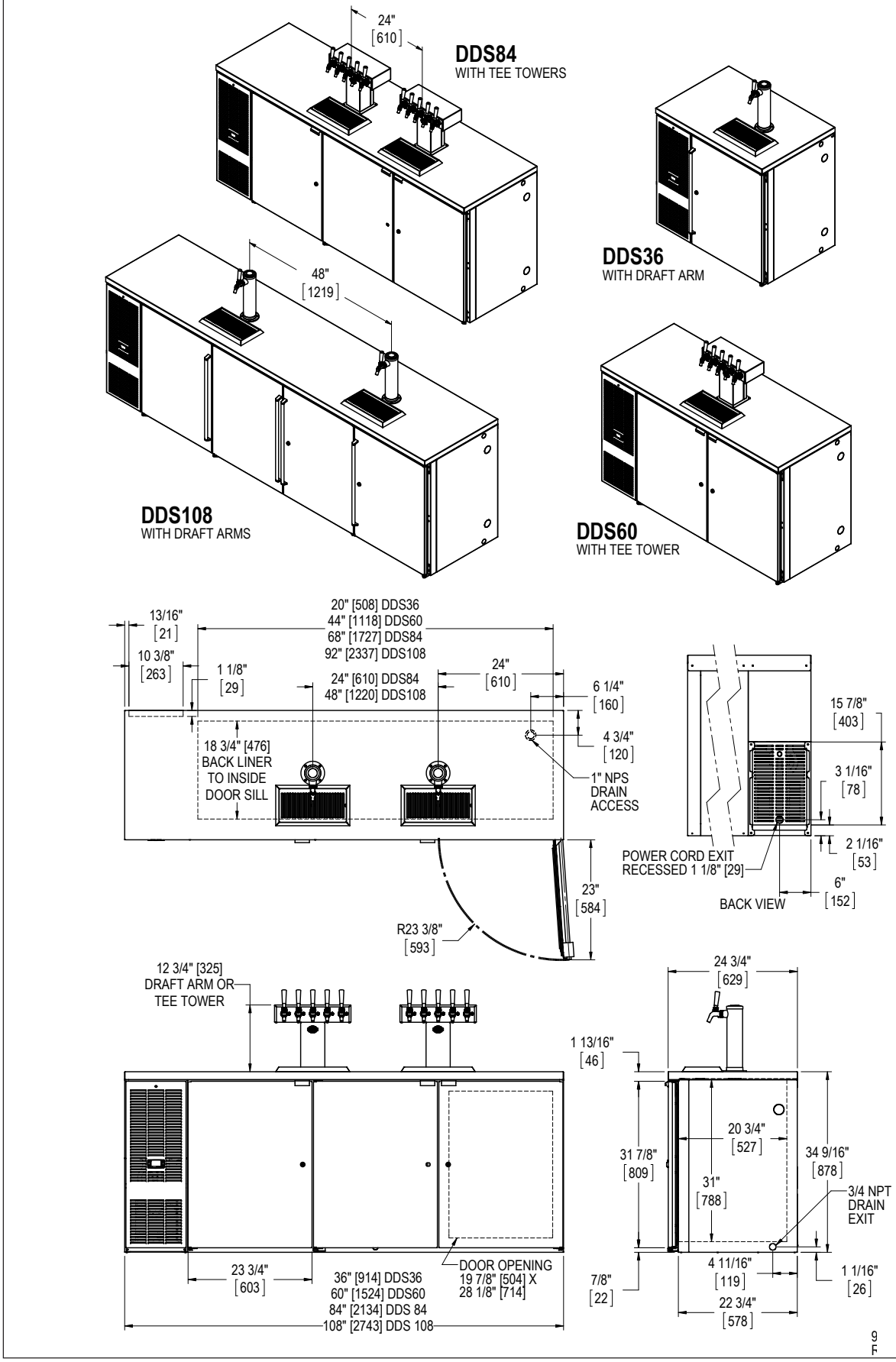
24"
[610]
DDS84
WITH TEE TOWERS
DDS36
WITH DRAFT ARM
48"
[1219]
DDS108
WITH DRAFT ARMS
DDS60
WITH TEE TOWER
13/16"
[21]
20" [508] DDS36
44" [1118] DDS60
68" [1727] DDS84
92" [2337] DDS108
10 3/8"
[263]
1 1/8"
[29]
24" [610] DDS84
48" [1220] DDS108
24"
[610]
6 1/4"
[160]
4 3/4"
[120]
18 3/4" [476]
BACK LINER
TO INSIDE
DOOR SILL
1" NPS
DRAIN
ACCESS
15 7/8"
[403]
3 1/16"
[78]
2 1/16"
[53]
POWER CORD EXIT
RECESSED 1 1/8" [29]
6"
[152]
BACK VIEW
23"
[584]
R23 3/8"
[593]
12 3/4" [325]
DRAFT ARM OR
TEE TOWER
24 3/4"
[629]
1 13/16"
[46]
20 3/4"
[527]
31 7/8"
[809]
34 9/16"
[878]
31"
[788]
3/4 NPT
DRAIN
EXIT
4 11/16"
[119]
1 1/16"
[26]
7/8"
[22]
22 3/4"
[578]
23 3/4"
[603]
36" [914] DDS36
60" [1524] DDS60
84" [2134] DDS 84
108" [2743] DDS 108
DOOR OPENING
19 7/8" [504] X
28 1/8" [714]

WIRING DIAGRAMS

BBR24/BBRN40

57342A-99-120-RevA

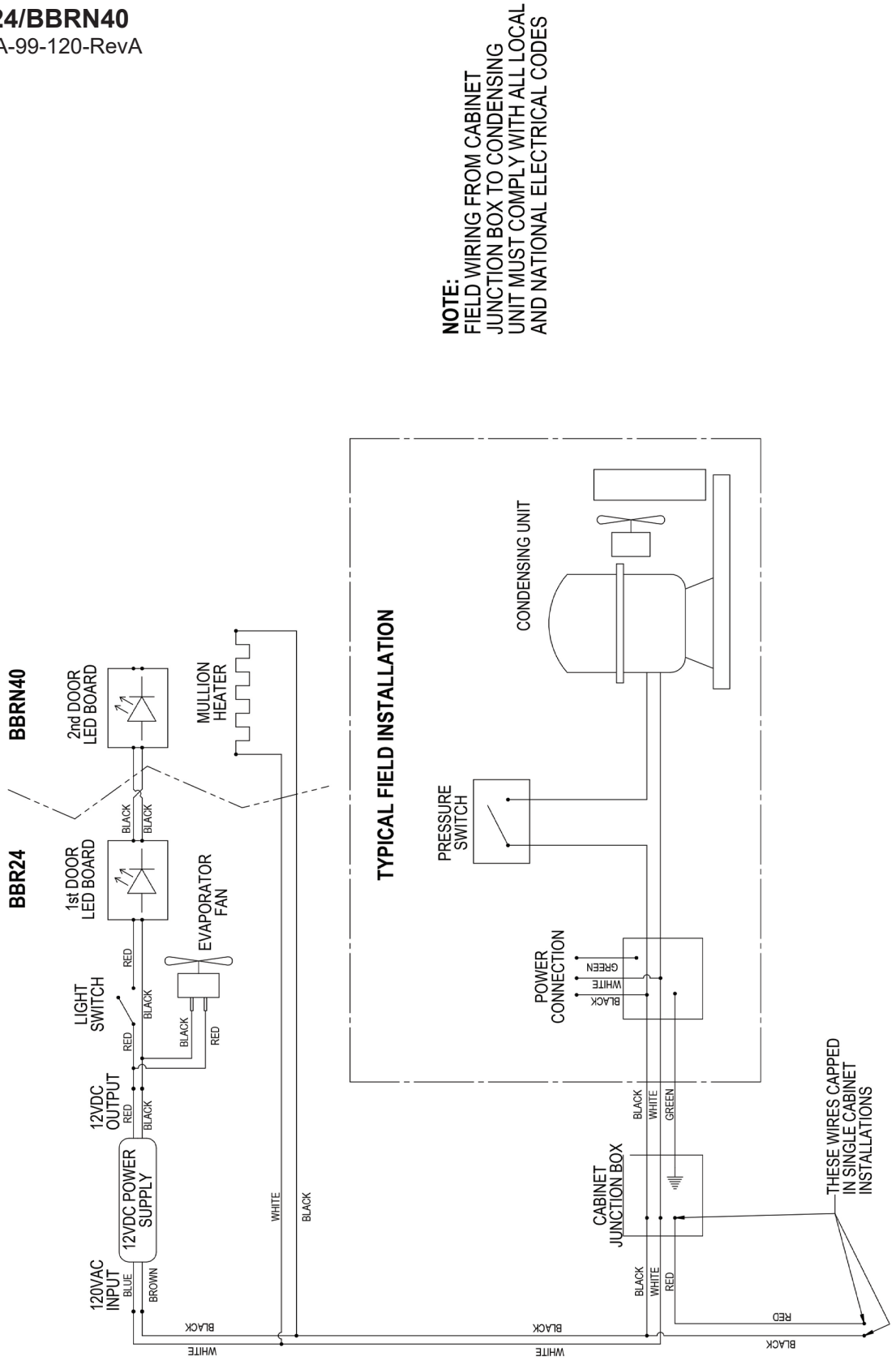

BBR48/BBRN60/BBR72/ BBRN80/BBR96

57342A-98-120-RevA

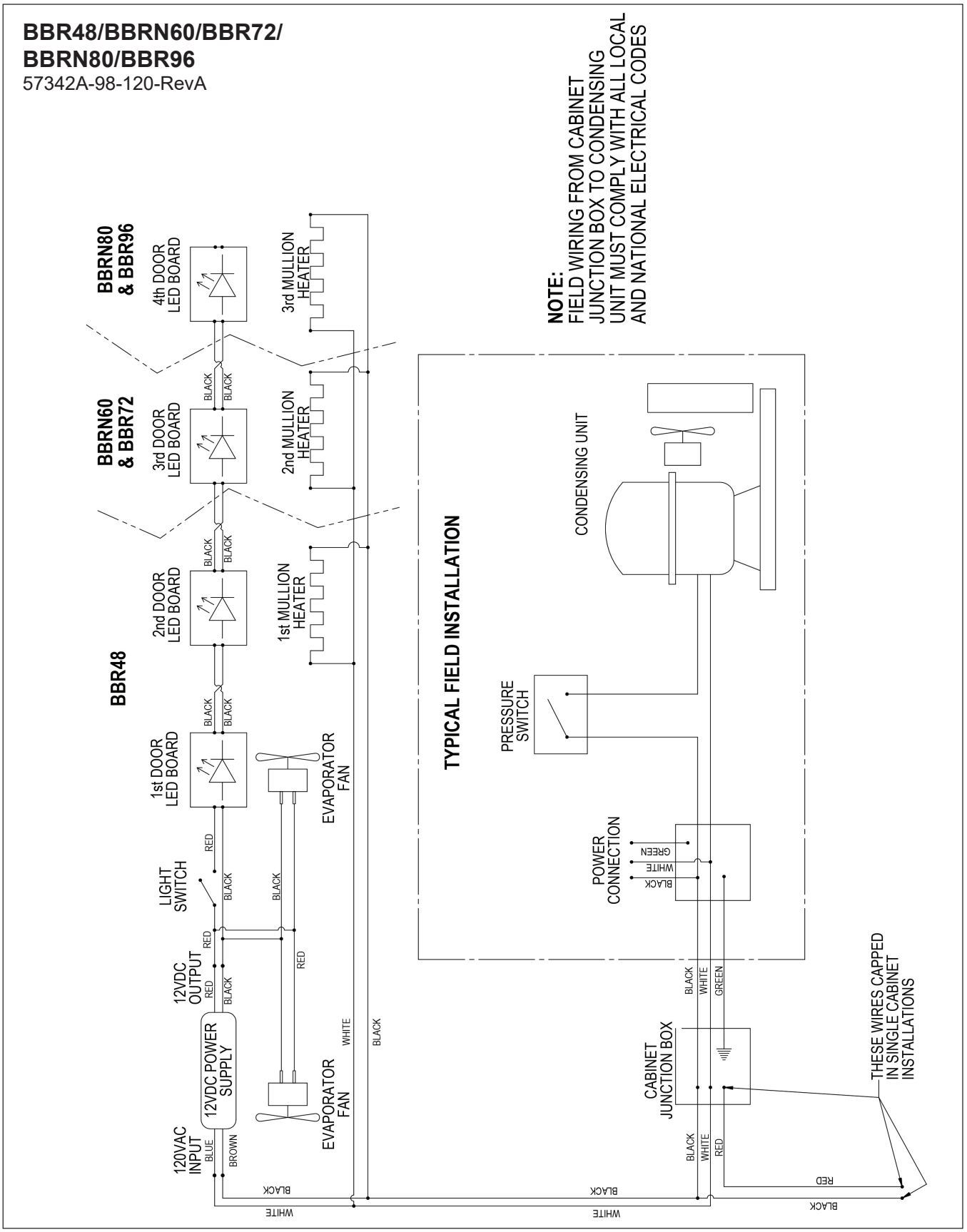

BBRLP
95322A-120-RevA

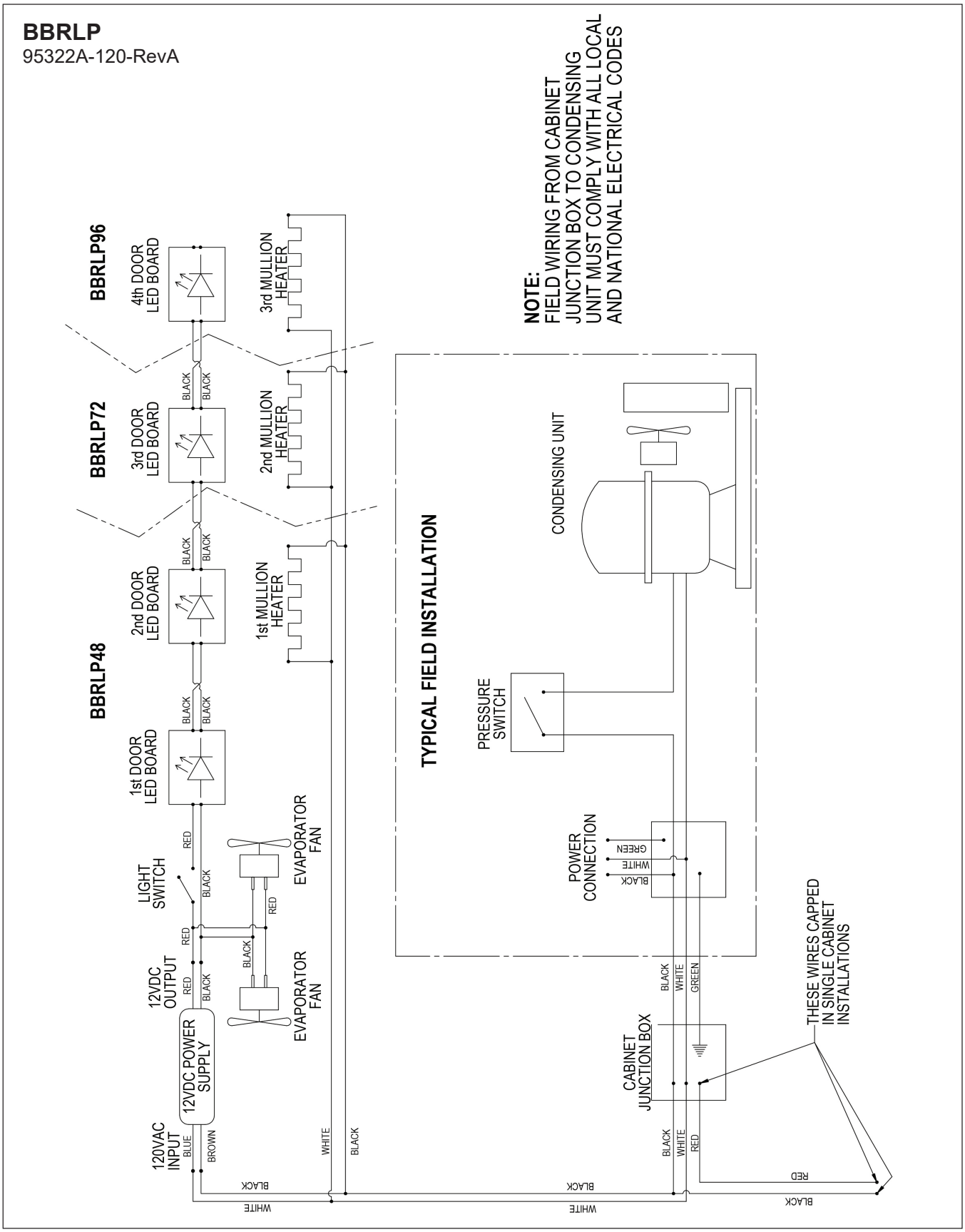

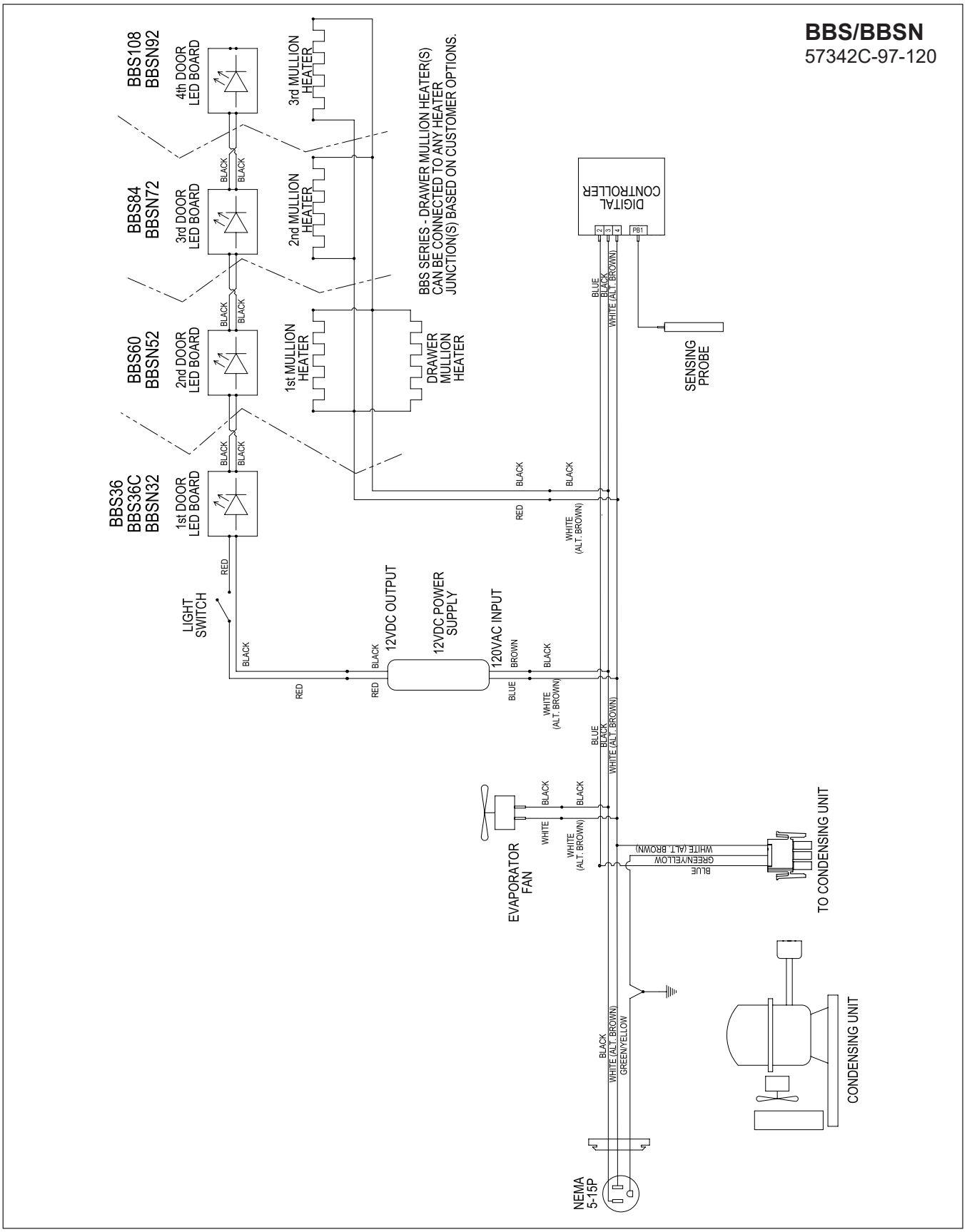
BBS/BBSN
57342C-97-120
BBS108
BBSN92
4th DOOR
LED BOARD
3rd MULLION
HEATER
BBS84
BBSN72
3rd DOOR
LED BOARD
2nd MULLION
HEATER
BBS60
BBSN52
2nd DOOR
LED BOARD
1st MULLION
HEATER
DRAWER
MULLION
HEATER
BBS36
BBS36C
BBSN32
1st DOOR
LED BOARD
BBS SERIES - DRAWER MULLION HEATER(S)
CAN BE CONNECTED TO ANY HEATER
JUNCTION(S) BASED ON CUSTOMER OPTIONS.
DIGITAL
CONTROLLER
SENSING
PROBE
LIGHT
SWITCH
12VDC OUTPUT
12VDC POWER
SUPPLY
120VAC INPUT
EVAPORATOR
FAN
TO CONDENSING UNIT
CONDENSING UNIT
NEMA
5-15P
BLACK
RED
WHITE
(ALT. BROWN)
BLUE
BROWN
GREEN/YELLOW
WHITE (ALT. BROWN)
PB1

BBSLP
95321C-120

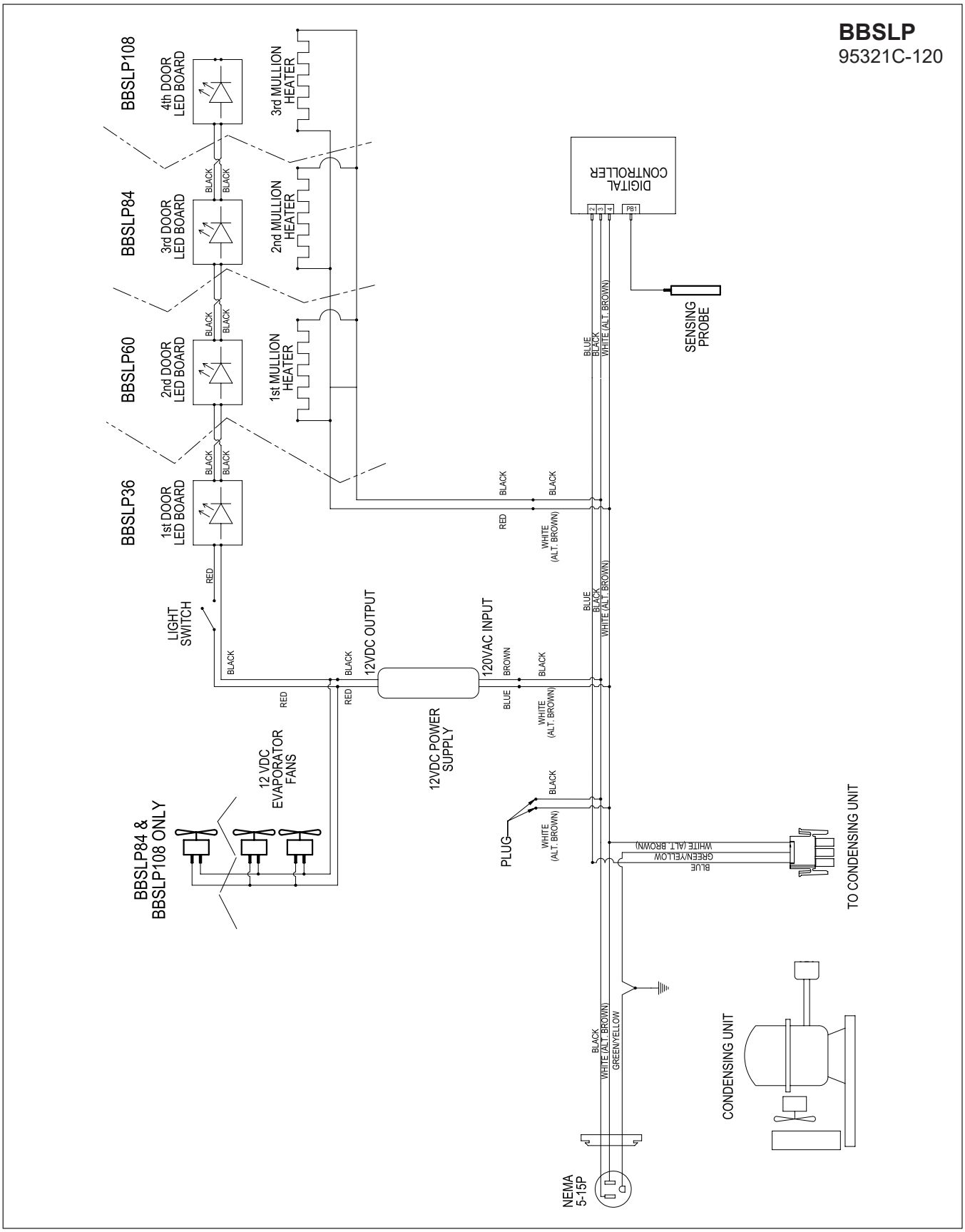

DDS/DDC
57342C-100-120

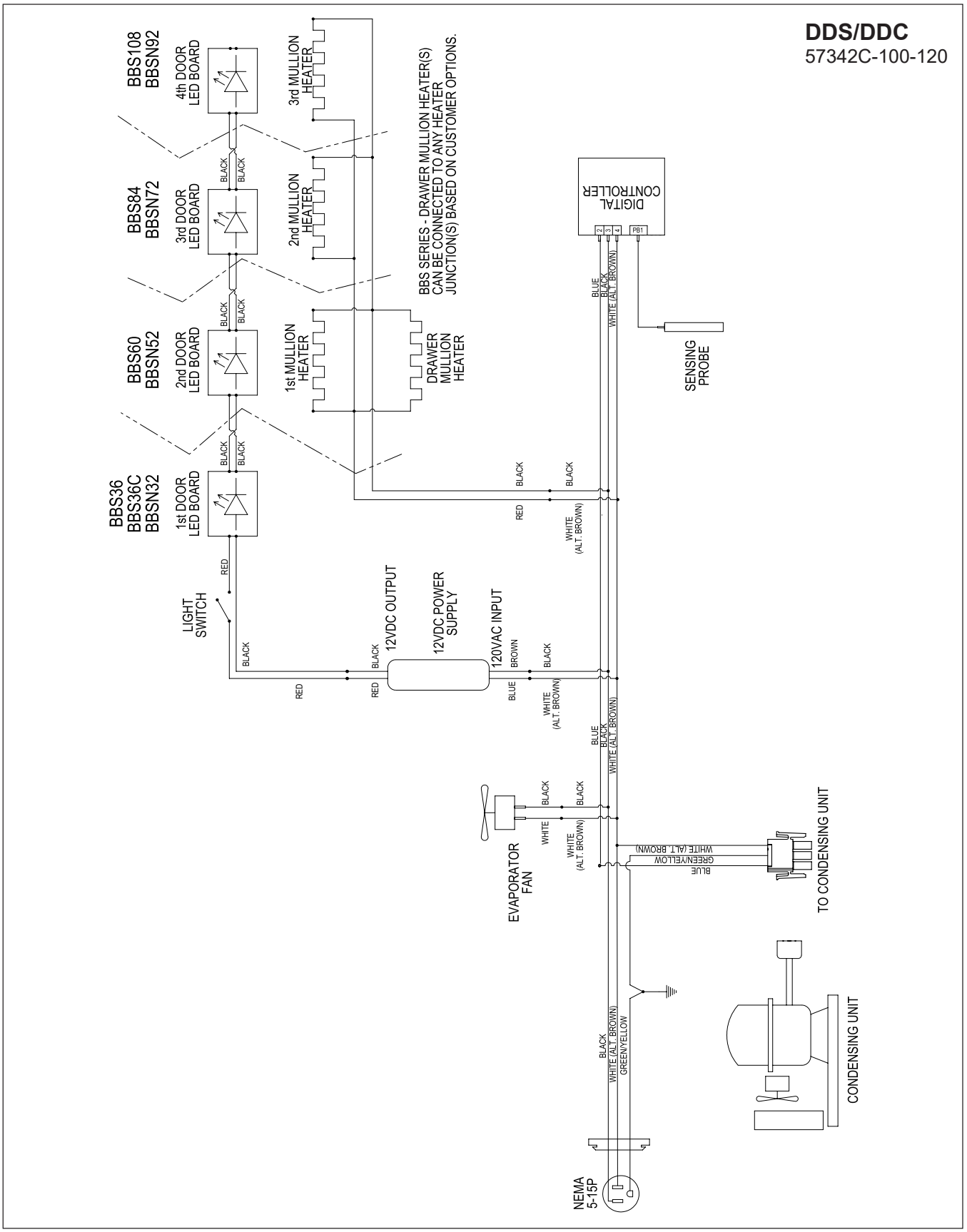

DZS36
57342B-108

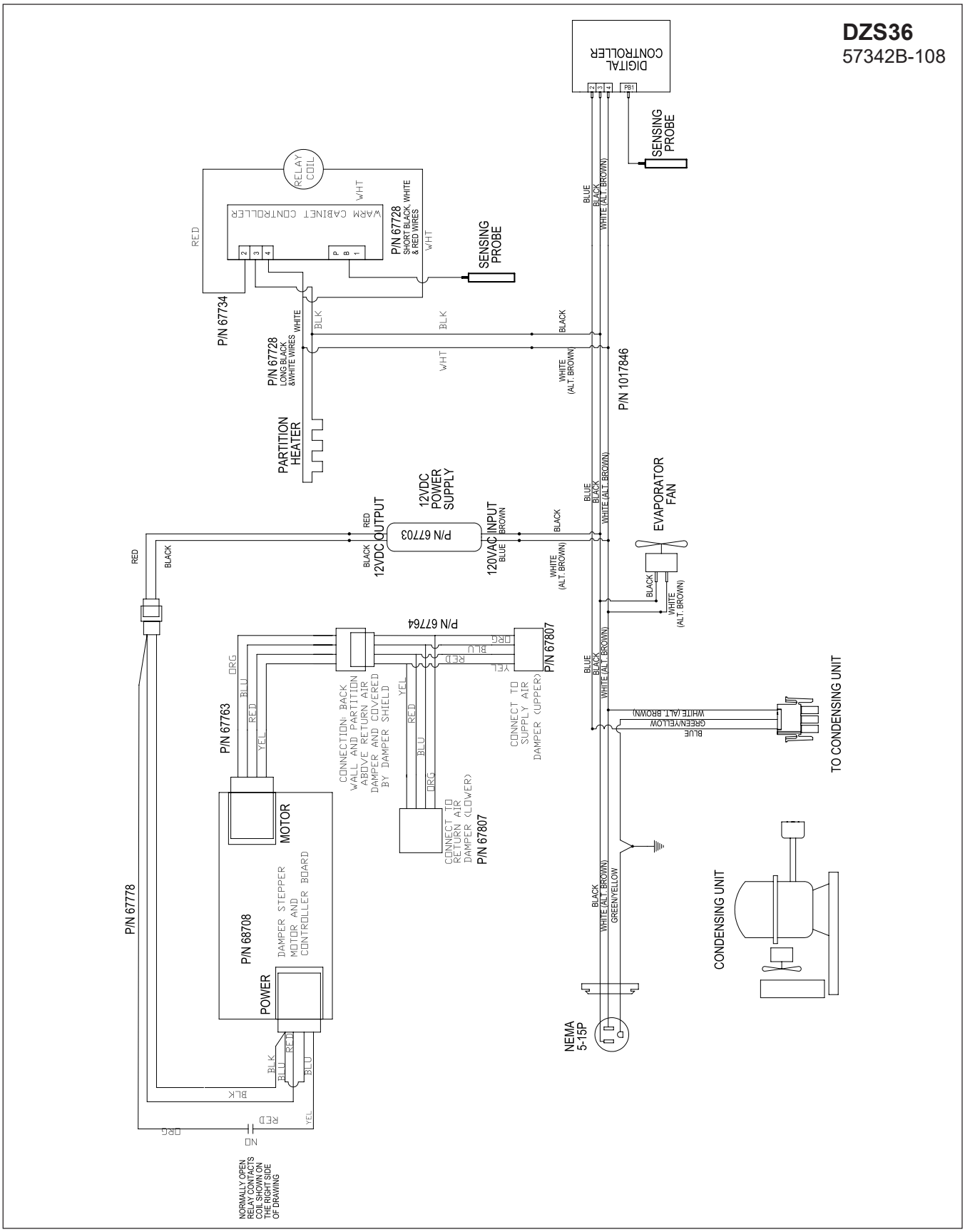

DZS60
57342B-107

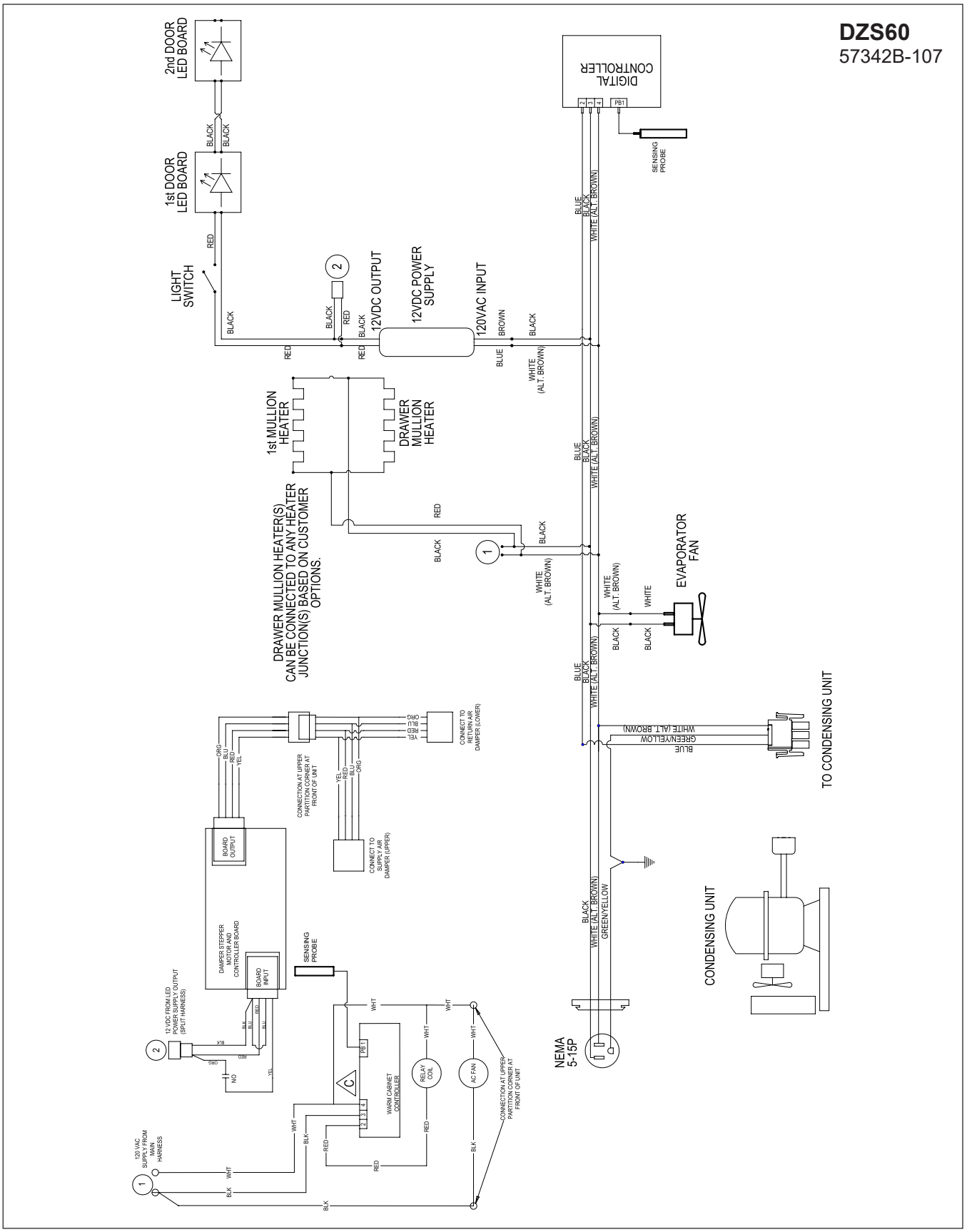

PTR
57342A-102-120-RevA

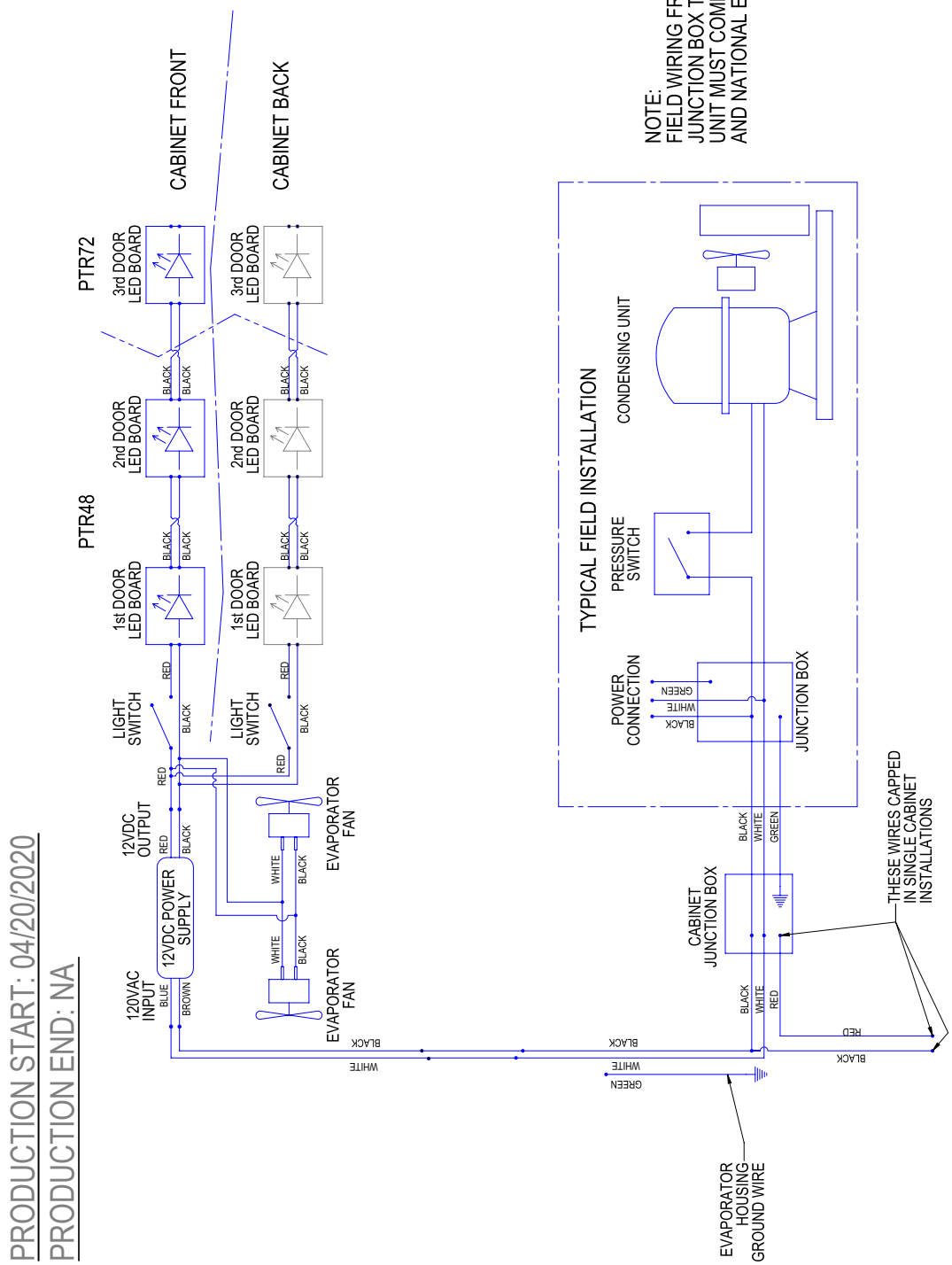

PRODUCTION START: 04/20/2020
PRODUCTION END: NA

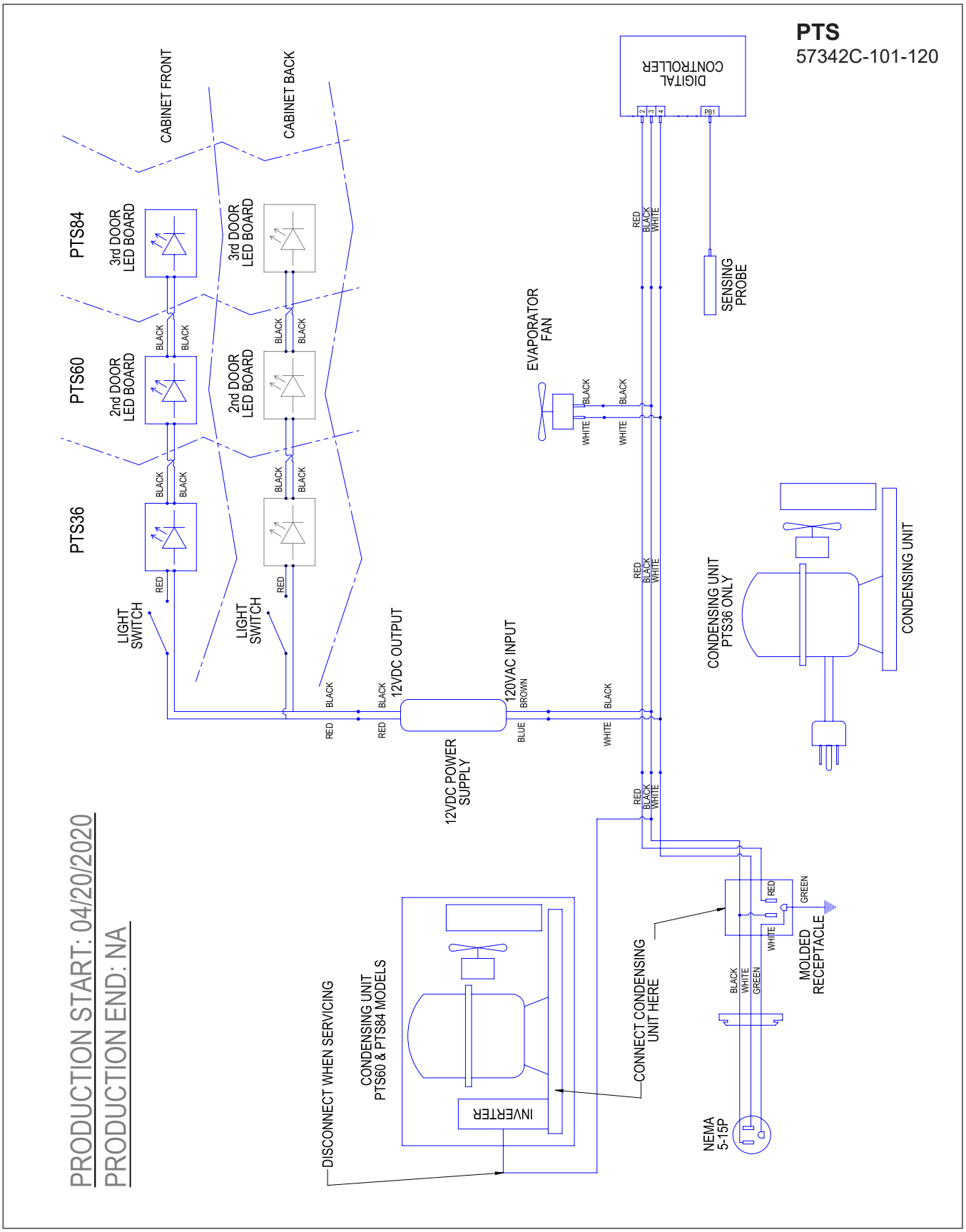
PTS
57342C-101-120
CABINET FRONT
CABINET BACK
PTS84
PTS60
PTS36
3rd DOOR LED BOARD
2nd DOOR LED BOARD
DIGITAL CONTROLLER
SENSING PROBE
EVAPORATOR FAN
LIGHT SWITCH
12VDC OUTPUT
120VAC INPUT
12VDC POWER SUPPLY
CONDENSING UNIT PTS36 ONLY
CONDENSING UNIT
CONDENSING UNIT PTS60 & PTS84 MODELS
INVERTER
DISCONNECT WHEN SERVICING
CONNECT CONDENSING UNIT HERE
MOLDED RECEPTACLE
NEMA 5-15P
PRODUCTION START: 04/20/2020
PRODUCTION END: NA

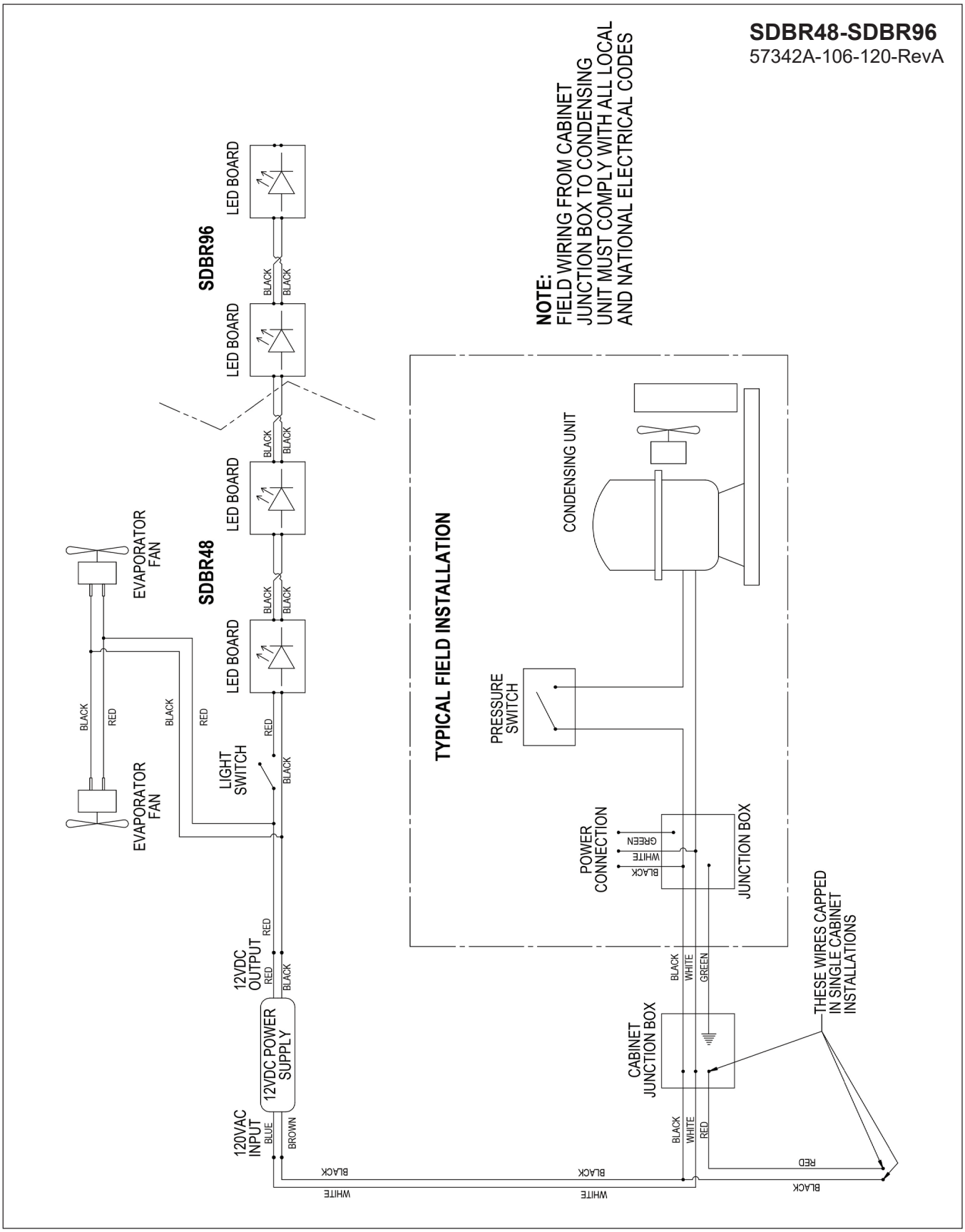
SDBR48-SDBR96
57342A-106-120-RevA
NOTE:
FIELD WIRING FROM CABINET JUNCTION BOX TO CONDENSING UNIT MUST COMPLY WITH ALL LOCAL AND NATIONAL ELECTRICAL CODES
TYPICAL FIELD INSTALLATION
SDBR96
SDBR48
LED BOARD
BLACK
EVAPORATOR FAN
LIGHT SWITCH
RED
CONDENSING UNIT
PRESSURE SWITCH
POWER CONNECTION
GREEN
WHITE
JUNCTION BOX
12VDC OUTPUT
12VDC POWER SUPPLY
120VAC INPUT
BLUE
BROWN
CABINET JUNCTION BOX
THESE WIRES CAPPED IN SINGLE CABINET INSTALLATIONS

SDBS
57342C-105-120

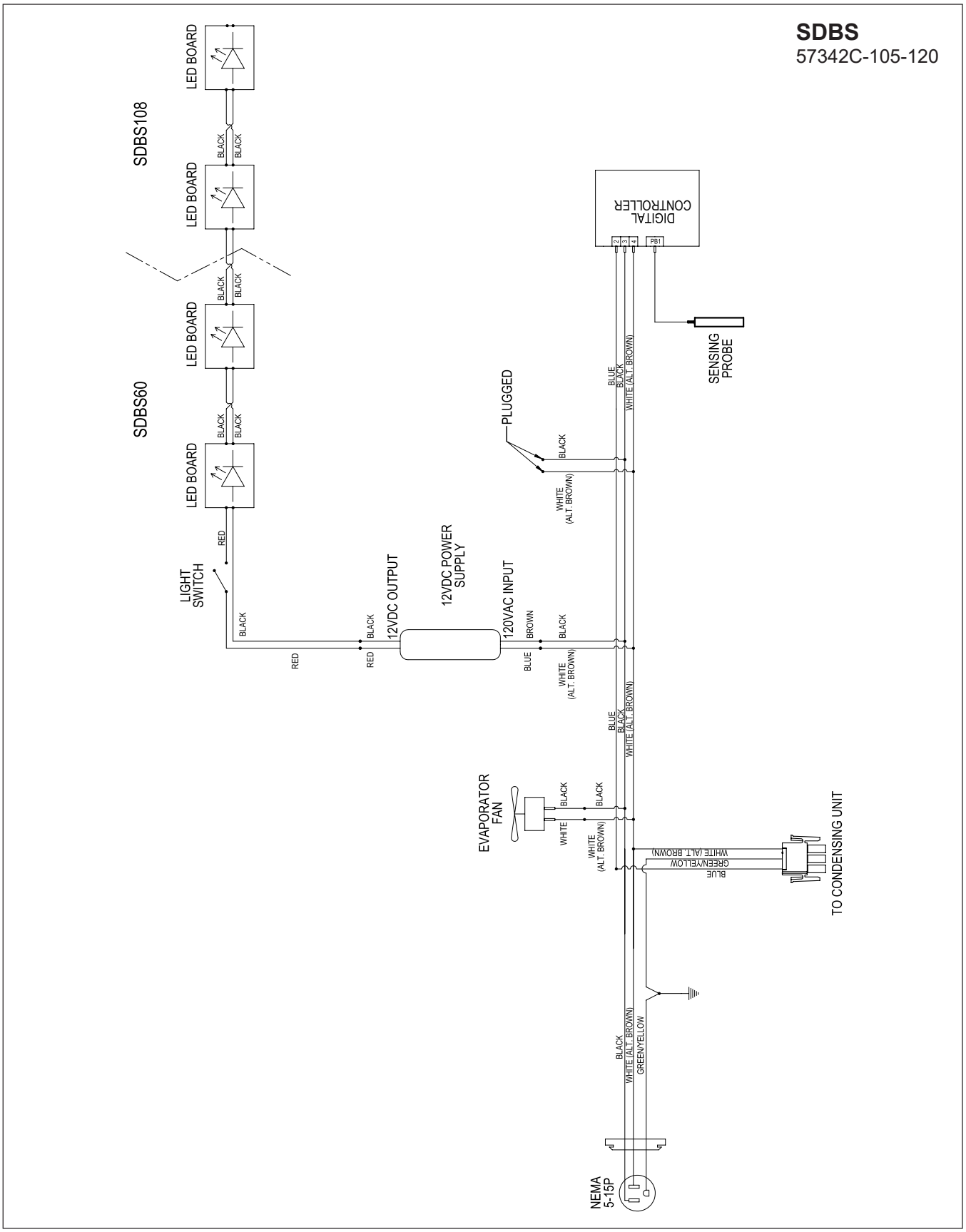

SDPR
57342A-104-120-RevA

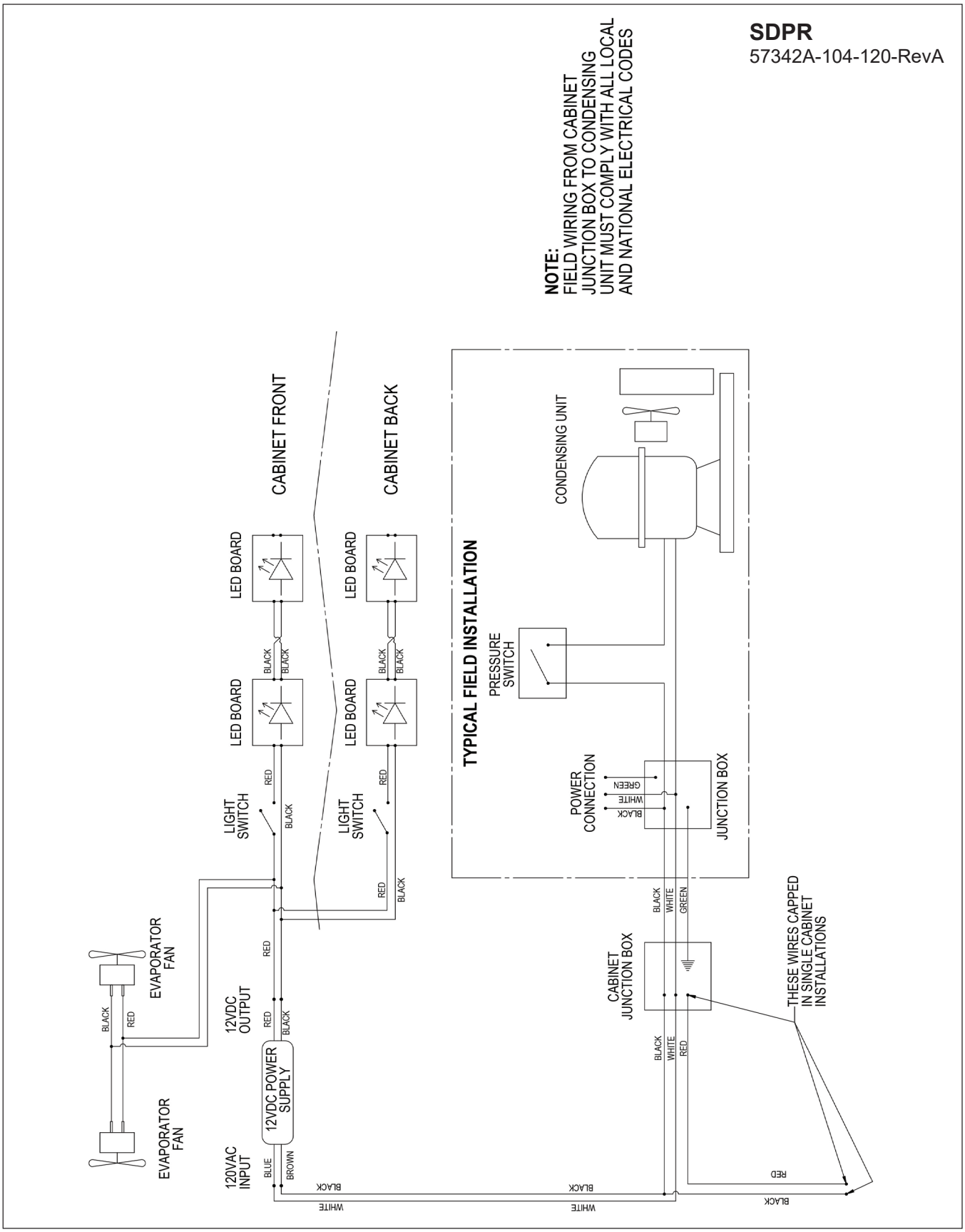

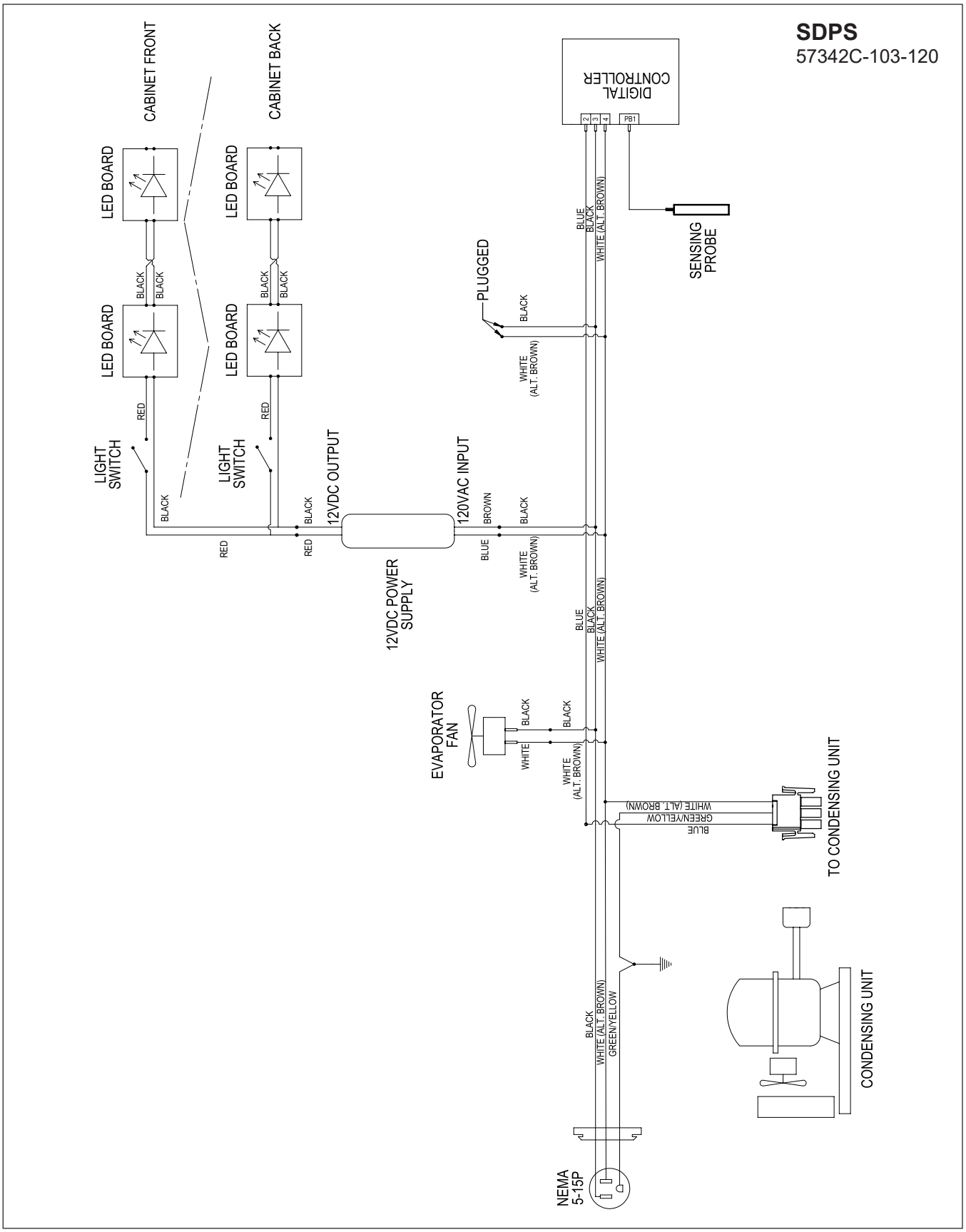
SDPS
57342C-103-120
CABINET FRONT
CABINET BACK
LED BOARD
LED BOARD
LED BOARD
LED BOARD
BLACK
BLACK
BLACK
BLACK
RED
RED
LIGHT SWITCH
LIGHT SWITCH
BLACK
BLACK
RED
RED
12VDC OUTPUT
12VDC POWER SUPPLY
120VAC INPUT
BROWN
BLUE
BLACK
WHITE (ALT. BROWN)
PLUGGED
BLACK
WHITE (ALT. BROWN)
DIGITAL CONTROLLER
2
3
4
PB1
BLUE
BLACK
WHITE (ALT. BROWN)
SENSING PROBE
EVAPORATOR FAN
BLACK
WHITE
BLACK
WHITE (ALT. BROWN)
BLUE
BLACK
WHITE (ALT. BROWN)
BLUE
GREEN/YELLOW
WHITE (ALT. BROWN)
TO CONDENSING UNIT
BLACK
WHITE (ALT. BROWN)
GREEN/YELLOW
NEMA 5-15P
CONDENSING UNIT

WARRANTY

The terms and conditions set forth below together with those appearing on the face of the Acknowledgement (the "Order") constitute the complete and exclusive agreement between Perlick Corporation and the Buyer pertaining to the goods and/or services identified in the Order. If there is a discrepancy or conflict between any exhibit or supplement to the Order and these terms and conditions, these terms and conditions shall control. The Order is intended by Seller and Buyer to be the complete, exclusive, and final statement of their agreement. Any changes to an Order must be in writing and signed by Perlick and Buyer.

TERMS NET 30 DAYS

Payment by Visa, MasterCard, American Express or Discover card accepted or cash in advance unless prior accommodations have been made with our Credit Department. Please direct inquiries for detailed information to our Credit Manager. All sales, excise, or similar taxes required by law to be collected or paid by seller shall be in addition to prices quoted unless an appropriate Tax Exemption certificate is furnished. All goods are sold F.O.B. factory. Except for otherwise provided, Perlick will not be responsible for freight, transportation, insurance, shipping, storage, handling, demurrage or similar charges. Invoices are payable in full in thirty (30) days following the invoice,s date of issuance. If by the terms of sale credit is extended, Perlick reserves the right to revoke such credit if buyer fails to pay for any products when due and may demand payment prior to the commencement of any further shipment.

WAIVER

Any waiver of strict compliance with the provisions of an Order must be in writing. No such waiver shall be construed as a waiver of any other term or condition except as provided in writing, nor as a waiver of any subsequent breach of the same term or condition.

METHOD OF SHIPMENT

All shipments are carefully packed and labeled. Crates, boxes and cartons used are of approved weight and strength. Freight rates are based upon 100 pound minimum.

LOST and DAMAGED MERCHANDISE

THE RESPONSIBILITY OF THE PERLICK CORPORATION CEASES UPON ACCEPTANCE OF ITS PRODUCTS BY THE CARRIER. Any damage or loss sustained in shipment is the carrier's responsibility. Before giving the carrier a clean receipt at time of delivery, make sure you receive every item on the bill and inspect every carton, crate and box for concealed damage, i.e., broken boards, crushed or punctured cartons, torn cardboard. IF ANY ITEMS ARE SHORT OR DAMAGED, DO NOT ACCEPT THE SHIPMENT UNLESS THE CARRIER MAKES A NOTATION OF THIS ON YOUR FREIGHT BILL. Then request an inspection. Do not destroy the packing materials. If their agent does not make an inspection within five days, advise the carrier via letter that you notified them regarding the matter and they have failed to act. You will need this letter to support your claim. Then file a claim for your loss. When you give the carrier a clean receipt, you accept the total responsibility for the shipment. UPS shipments are insured individually and UPS will replace all merchandise that is lost or damaged.

RETURN OF MERCHANDISE

Do not return any merchandise without our approval. Merchandise returned without a return merchandise authorization number will not be accepted at Perlick. Used, discontinued, and certain custom made items cannot be returned for credit. These custom items include non-catalog products (specials) as well as custom assembled catalog products. Catalog items are designated as non-returnable on the price list page on which they appear. Items returned must be in new condition and packaged in their original carton or crate. Freight charges must be prepaid on all return shipments.

When a return is authorized, a credit may be allowed pending an examination of the returned goods. The amount of the restocking charge will depend on the condition of the equipment. The minimum restocking charge for glass washers, bottle coolers, frosters, direct draws, cooler series back bars and accessory parts is 20%. The minimum restocking charge for custom series cabinets is 50%. The minimum restocking charge for un-assembled, freestanding underbar stainless steel modules is 20%. Assembled under bar modules are considered custom products and are not returnable for credit. The restocking charge on the item returned is either a percentage of the value of the item or $35.00, whichever is greater.

ONE YEAR PARTS WARRANTY

Perlick products are guaranteed against defects in both material and workmanship for a period of one year from date of sale. Defective parts will be replaced on a no-charge basis, F.O.B. our factory, when adjudged defective upon inspection. We are not responsible for parts damaged by alteration, unauthorized service, accident or abuse. All costs associated with replacement, including freight, labor and/or loss of sales, are the responsibility of the user.

ONE YEAR LABOR WARRANTY

In addition to Perlick's one year parts warranty and five year compressor warranty, ALL PERLICK REFRIGERATION SYSTEMS are offered with a one year labor warranty at no extra charge. Perlick's one year labor warranty provides that Perlick will pay for the cost of any labor to replace any defective part for up to one year after installation, subject to the following terms and conditions:

(A) Parts returned to Perlick shall be returned freight prepaid and shall be identified with Perlick's serial number and return authorization number.

(B) Improper operation due to voltage variances, inadequate wiring and physical damage is the responsibility of the purchaser. They are not manufacturing defects.

(C) Condenser coils shall be cleaned regularly. Failure to provide an adequate flow of cooling air will void this warranty.

(D) Factory-specified maintenance and installation will be provided by the selling dealer who shall also be responsible for the installation and set-up of these products in accordance with local plumbing, refrigeration and electrical codes.

Perlick's one year labor policy applies to the United States and Canada. IT DOES NOT APPLY TO REFRIGERATION SYSTEMS ADDED BY OTHERS (remote systems) or any part which has been subject to misuse, neglect, alteration, accident, or to any damage caused by transportation, flood, fire or other acts of God.

NOTES

NOTES

Perlick®

Z2604

8300 West Good Hope Road • Milwaukee, WI 53223 •
Toll Free 800.558.5592 • Fax 414.353.7069 • www.perlick.com