Delfield

Drop Ins

8100-EF, N8000, N8000N, N8000-R, N8100B, N8100-BR, N8100-FA, N8200, N8200G, N8200-ST, N8600, N8700-D, N8700-DESP, N8700-R, N8800

Original Instructions
Installation, Operation and Maintenance Manual

This manual is updated as new information and models are released. Visit our website for the latest manual.

Part Number: 9291458 10/16

Manitowoc Foodservice

Safety Notices

⚠ Warning

Read this manual thoroughly before operating, installing or performing maintenance on the equipment. Failure to follow instructions in this manual can cause property damage, injury or death.

⚠ DANGER

Keep power cord AWAY from HEATED surfaces. DO NOT immerse power cord or plug in water. DO NOT let power cord hang over edge of table or counter.

⚠ DANGER

Do not lift the condensing unit by the refrigerant tubing or other components. These features will not support the condensing unit weight. Injury and unit damage may occur!

⚠ DANGER

Do not install or operate equipment that has been misused, abused, neglected, damaged, or altered/ modified from that of original manufactured specifications.

⚠ DANGER

All utility connections and fixtures must be maintained in accordance with Local and national codes.

⚠ Warning

This appliance is not intended for use by persons (including children) with reduced physical, sensory or mental capabilities, or lack of experience and knowledge, unless they have been given supervision concerning use of the appliance by a person responsible for their safety. Do not allow children to play with this appliance.

⚠ Warning

Do not store or use gasoline or other flammable vapors or liquids in the vicinity of this or any other appliance. Never use flammable oil soaked cloths or combustible cleaning solutions, for cleaning.

⚠ Warning

Authorized Service Representatives are obligated to follow industry standard safety procedures, including, but not limited to, local/national regulations for disconnection / lock out / tag out procedures for all utilities including electric, gas, water and steam.

⚠ Warning

This product contains chemicals known to the State of California to cause cancer and/or birth defects or other reproductive harm. Operation, installation, and servicing of this product could expose you to airborne particles of glasswool or ceramic fibers, crystalline silica, and/or carbon monoxide. Inhalation of airborne particles of glasswool or ceramic fibers is known to the State of California to cause cancer. Inhalation of carbon monoxide is known to the State of California to cause birth defects or other reproductive harm.

⚠ Warning

Do not use electrical appliances or accessories other than those supplied by the manufacturer.

⚠ Warning

Use caution when handling metal surface edges of all equipment.

⚠ Warning

DO NOT touch refrigeration lines inside units; some may exceed temperatures of 200°F (93.3°C).

Note

Proper installation, care and maintenance are essential for maximum performance and trouble-free operation of your equipment. Visit our website www.mtwkitchencare.com for manual updates, translations, or contact information for service agents in your area.

Table of Contents

Section 1
General Information

Model Numbers **5**
Serial Number Location **6**
Warranty Information **6**
Regulatory Certifications **6**
Domestic Models 6
Export Models 6

Section 2
Installation

Location **7**
Clearance Requirements **8**
Compressor Louvers 8
Weight Of Equipment **8**
Dimensions **10**
Cutout Installation Dimensions **13**
Curved Drop-In Cutout Details 16
Hot Food Wells Control Panel Installation **17**
All 8700 Series Control Panel Installation 17
N8100-FA Unit Assembly **17**
Electrical Service **17**
Voltage 17
Ground Fault Circuit Interrupter 17
Rated Amperages, Horsepower, Voltage & Power Cord Chart 18
Refrigeration **19**
Drain Connections **20**
Optional Auto Fill Installation **21**
Applicable to N8600 & N8800 Models 21
Applicable to N8700 Models 22

Section 3
Operation

Product Quality in Cold Pans **23**
8100-EF(N) Series Operation **24**
N8100B, N8100-BR & N8100NB Operation **24**
N8100-FA Operation **25**
N8200 & N8200-ST Operation **25**
Operation N8200G **25**
8600 Hot/Cold Series Operation **26**
N8700-D, N8700N, N8700-R & N8800 Series Operation **27**
N8700-DESP Operation **28**

Section 4
Maintenance

Cleaning and Sanitizing Procedures **29**
General 29
Exterior Cleaning 30
Cleaning the Condenser Coil 30
N8100-FA Series Drain Maintenance 30

THIS PAGE INTENTIONALLY LEFT BLANK

Section 1
General Information

Model Numbers

8100-EF Series LiquiTec® Eutetic Fluid Refrigerated Cold Pans - R404A		
8118-EF	8132-EF	8145-EF
8159-EF	8172-EF	8186-EF
8100-EF-E Export Series LiquiTec® Eutetic Fluid Refrigerated Cold Pans - R404A		
8118-EF-E	8132-EF-E	8145-EF-E
8159-EF-E	8172-EF-E	8186-EF-E
8100-EFN Series LiquiTec® Slim Line Eutetic Fluid Refrigerated Cold Pans - R404A		
8148-EFN	8169-EFN	8191-EFN
8100-EFN-E Export Series LiquiTec® Slim Line Eutetic Fluid Refrigerated Cold Pans - R404A		
8148-EFN-E	8169-EFN-E	8191-EFN-E
N8000 Series Ice Cooled Cold Pans		
N8018	N8030	N8043
N8056	N8069	N8081
N8000N Series Narrow Ice Cooled Cold Pans		
N8046N	N8068N	
N8000-R Series Curved Ice Cooled Cold Pans		
N8044-R	N8059-R	N8076-R
N8094-R		
N8100B Series Self-Contained Mechanically Cooled Pans - R404A		
N8118B	N8130B	N8143B
N8156B	N8169B	N8181B
N8100B-E Export Series Self-Contained Mechanically Cooled Pans - R404A		
N8118B-E	N8130B-E	N8143B-E
N8100B-E Export Series Self-Contained Mechanically Cooled Pans - R134A		
N8156B-E	N8169B-E	
N8100BR Series Curved Self-Contained Mechanically Cooled Pans - R404A		
N8144-BR	N8159-BR	N8176-BR
N8194-BR		
N8100-FA Series Forced Air Drop-In Mechanically Cooled Cold Pans - R404A		
N8131-FA	N8144-FA	N8157-FA
N8169-FA	N8182-FA	
N8100NB Series Self-Contained Mechanically Cooled Pans Narrow Style - R404A		
N8146NB	N8168NB	
N8100NB-E Export Series Self-Contained Mechanically Cooled Pans Narrow Style - R404A		
N8146NB-E	N8168NB-E	

N8200 Series Self-Contained Frost Tops - R404A		
N8231	N8245	N8259
N8273	N8287	
N8200-E Export Series Self-Contained Frost Tops - R404A		
N8231-E	N8245-E	N8259-E
N8273-E	N8287-E	
N8200G Series Self-Contained Granite Cold Slabs		
N8231G	N8245G	N8259G
N8273G		
N8200G-E Export Series Self-Contained Granite Cold Slabs - R404A		
N8231G-E	N8245G-E	N8259G-E
N8200-ST Series Self-Contained Frost Tops - R404A		
N8230-ST	N8240-ST	N8256-ST
N8258-ST	N8275-ST	
N8600 Series Self Contained Combination Hot/Cold Food Wells - R404A		
N8630	N8643	N8656
N8669	N8681	
N8700D Series Individually Controlled Heated Food Wells		
N8717-D	N8731-D	N8745-D
N8759-D	N8773-D	N8787-D
N8700D-E Export Series Individually Controlled Heated Food Wells		
N8717-D-E	N8731-D-E	N8745-D-E
N8759-D-E	N8773-D-E	N8787-D-E
N8700DESP Series Individually Controlled Energy Savings Heated Food Wells		
N8717-DESP	N8731-DESP	N8745-DESP
N8759-DESP	N8773-DESP	N8787-DESP
N8700-D-ESP-E Export Series Individually Controlled Energy Savings Heated Food Wells		
N8717-D-ESP-E	N8731-D-ESP-E	N8745-D-ESP-E
N8759-D-ESP-E	N8773-D-ESP-E	N8787-D-ESP-E
N8700N Series Individually Controlled Heated Narrow Food Wells		
N8746ND	N8768N	N8768ND
N8700-R Series Curved Individually Controlled Heated Food Wells		
N8744-R	N8759-R	N8776-R
N8794-R		
N8800 Series Single Tank Electric Hot Food Wells		
N8831	N8845	N8859
N8873	N8887	
N8800-E Export Series Single Tank Electric Hot Food Wells		
N8831-E	N8845-E	N8859-E
N8873-E	N8887-E	

Serial Number Location

Ther serial number is listed on the serial tag. If applicable it will also list the refrigerant used and the amount of charge.

- The serial tag on self-contained refrigerated units is located near the condensing unit.
- The serial tag on ice cooled units and remote refrigerated units is on the outside bottom of the food well.
- On hot food pans and hot/cold combination pans, the serial tag is located on the back of the control raceway or remote panel.

Always have the serial number of your unit available when calling for parts or service.

Warranty Information

- Register your product for warranty,
- Verify warranty information,
- View and download a copy of your warranty,

at www.delfield.com/warranty

Regulatory Certifications

DOMESTIC MODELS

All domestic models are certified by:

- National Sanitation Foundation (NSF)

All domestic electrical models are certified by:

- Underwriters Laboratories (UL)
- Underwriters Laboratories of Canada (CUL)

Domestic N8700DESP models are also certified by:

- Technical Inspection Association
- European Conformity

EXPORT MODELS

All export models are certified by:

- National Sanitation Foundation (NSF)
- Technical Inspection Association
- European Conformity

Section 2
Installation

⚠ DANGER

Installation must comply with all applicable fire and health codes in your jurisdiction.

⚠ DANGER

Use appropriate safety equipment during installation and servicing.

⚠ Warning

Remove all removable panels before lifting and installing.

⚠ Warning

Do not damage the refrigeration circuit when installing, maintaining or servicing the unit.

⚠ Caution

The units with LiquiTec technology cold pans contain a non-toxic eutectic fluid within a sealed inner liner. This fluid may leak if the tank is punctured so care must be taken when uncrating and setting in place. The eutectic fluid is non-toxic and may be flushed down a disposal drain. Units with a Eutectic Fluid Cold Pan require the same precautions. The fluid is NOT refillable and loss of fluid due to a puncture would cause irreparable damage. If the LiquiTec unit cold pans leak, immediately call the Delfield service department directly at 1-800-733-8821 not your local service agent.

Location

⚠ Warning

This equipment must be positioned so that the plug is accessible unless other means for disconnection from the power supply (e.g., circuit breaker or disconnect switch) is provided.

⚠ Warning

Adequate means must be provided to limit the movement of this appliance without depending on or transmitting stress to the electrical conduit.

⚠ Warning

To avoid instability the installation area must be capable of supporting the combined weight of the equipment and product. Additionally the equipment must be level side to side and front to back.

⚠ Warning

This equipment is intended for indoor use only. Do not install or operate this equipment in outdoor areas.

⚠ Caution

Do not position the air intake vent near steam or heat exhaust of another appliance.

The location selected for the equipment must meet the following criteria. If any of these criteria are not met, select another location.

- Units are intended for indoor use only.
- The location MUST be level, stable and capable of supporting the weight of the equipment.
- The location MUST be free from and clear of combustible materials.
- Equipment MUST be level both front to back and side to side.
- Position the equipment so it will not tip or slide.
- Recommended air temperature is 41° - 86°F (5° - 30°C).
- Proper air supply for ventilation is REQUIRED AND CRITICAL for safe and efficient operation. Refer to Clearance Requirements chart on page 8.
- Do not obstruct the flow of ventilation air. Make sure the air vents of the equipment are not blocked.
- Do not install the equipment directly over a drain. Steam rising up out of the drain will adversely affect operation, air circulation, and damage electrical / electronic components.

Clearance Requirements

⚠ DANGER

Minimum clearance requirements are the same for noncombustible locations as for combustible locations. The flooring under the appliance must be made of a noncombustible material.

⚠ DANGER

Risk of fire/shock. All minimum clearances must be maintained. Do not obstruct vents or openings.

Heated & Combination Hot/Cold Food Wells Bottom & Side Clearance
3.00" (7.6cm)
Cooled Pans, Frost Tops & Granite Cold Slabs Clearance
0" (0cm)

- Keep the vents clean and free of obstruction.

COMPRESSOR LOUVERS

- Self-contained refrigerated units require airflow to the compressor.
- A 13" x 25" (33 cm x 63.5 cm) louver is provided by Delfield and must be installed in the counter in front of the condenser. The louver cutout dimension is 11" x 22" (27.9 cm x 55.9 cm).
- The rear must have an opening to permit removal of heated air. The opening must be at least 8" x 11", a total of 88 square inches (20.3 cm x 27.9 cm, a total of 566 square centimeters).

Weight Of Equipment

Model	Ship Weight
8100-EF Series	
8118-EF	169lbs (77kg)
8132-EF	215lbs (98kg)
8145-EF	265lbs (120kg)
8159-EF	285lbs (130kg)
8172-EF	295lbs (134kg)
8186-EF	394lbs (179kg)
8100-EF-E Export Series	
8118-EF-E	169lbs (77kg)
8132-EF-E	215lbs (98kg)
8145-EF-E	265lbs (120kg)
8159-EF-E	285lbs (130kg)
8172-EF-E	295lbs (134kg)
8186-EF-E	394lbs (179kg)
8100-EFN Series	
8148-EFN	235lbs (107kg)
8169-EFN	285lbs (130kg)
8191-EFN	295lbs (134kg)
8100-EFN-E Export Series	
8148-EFN-E	235lbs (107kg)
8169-EFN-E	285lbs (130kg)
8191-EFN-E	295lbs (134kg)
N8000 Series	
N8018	38lbs (17kg)
N8030	84lbs (38kg)
N8043	110lbs (50kg)
N8056	139lbs (63kg)
N8069	160lbs (73kg)
N8081	197lbs (89kg)
N8000N Series	
N8046N	100lbs (45kg)
N8068N	120lbs (55kg)
N8000-R Series	
N8044-R	100lbs (45kg)
N8059-R	118lbs (53kg)
N8076-R	145lbs (65kg)
N8094-R	164lbs (74kg)
N8100B Series	
N8118B	100lbs (45kg)
N8130B	140lbs (64kg)
N8143B	173lbs (78kg)
N8156B	205lbs (93kg)
N8169B	225lbs (102kg)
N8181B	258lbs (117kg)
N8100B-E Export Series - R404A	
N8118B-E	100lbs (45kg)
N8130B-E	140lbs (64kg)
N8143B-E	173lbs (78kg)
N8100B-E Export Series - R134A	
N8156B-E	205lbs (93kg)
N8169B-E	225lbs (102kg)
N8100BR Series	
N8144-BR	161lbs (72kg)
N8159-BR	184lbs (83kg)
N8176-BR	233lbs (105kg)
N8194-BR	243lbs (109kg)

Model	Ship Weight
N8100-FA Series	
N8131-FA	168lbs (76kg)
N8144-FA	175lbs (79kg)
N8157-FA	225lbs (102kg)
N8169-FA	235lbs (107kg)
N8182-FA	406lbs (184kg)
N8100NB Series	
N8146NB	175lbs (80kg)
N8168NB	240lbs (109kg)
N8100NB-E Export Series	
N8146NB-E	175lbs (80kg)
N8168NB-E	240lbs (109kg)
N8200 Series	
N8231	142lbs (64kg)
N8245	168lbs (76kg)
N8259	193lbs (88kg)
N8273	209lbs (95kg)
N8287	239lbs (108kg)
N8200-E Export Series	
N8231-E	142lbs (64kg)
N8245-E	168lbs (76kg)
N8259-E	193lbs (88kg)
N8273-E	209lbs (95kg)
N8287-E	239lbs (108kg)
N8200G Series	
N8231G	219lbs (99kg)
N8245G	284lbs (129kg)
N8259G	338lbs (153kg)
N8273G	425lbs (193kg)
N8200G-E Export Series	
N8231G-E	219lbs (99kg)
N8245G-E	284lbs (129kg)
N8259G-E	338lbs (153kg)
N8200-ST Series	
N8230-ST	142lbs (64kg)
N8240-ST	168lbs (76kg)
N8256-ST	193lbs (88kg)
N8258-ST	209lbs (95kg)
N8275-ST	239lbs (108kg)
N8600 Series	
N8630	164lbs (74kg)
N8643	198lbs (90kg)
N8656	233lbs (106kg)
N8669	266lbs (121kg)
N8681	301lbs (137kg)
N8700D Series	
N8717-D	41lbs (19kg)
N8731-D	99lbs (45kg)
N8745-D	134lbs (61kg)
N8759-D	166lbs (75kg)
N8773-D	186lbs (84kg)
N8787-D	236lbs (107kg)
N8700D-E Export Series	
N8717-D-E	41lbs (19kg)
N8731-D-E	99lbs (45kg)
N8745-D-E	134lbs (61kg)
N8759-D-E	166lbs (75kg)
N8773-D-E	186lbs (84kg)
N8787-D-E	236lbs (107kg)

Model	Ship Weight
N8700DESP Series	
N8717-DESP	41lbs (19kg)
N8731-DESP	99lbs (45kg)
N8745-DESP	134lbs (61kg)
N8759-DESP	166lbs (75kg)
N8773-DESP	186lbs (84kg)
N8787-DESP	236lbs (107kg)
N8700-D-ESP-E Export Series	
N8717-D-ESP-E	41lbs (19kg)
N8731-D-ESP-E	99lbs (45kg)
N8745-D-ESP-E	134lbs (61kg)
N8759-D-ESP-E	166lbs (75kg)
N8773-D-ESP-E	186lbs (84kg)
N8787-D-ESP-E	236lbs (107kg)
N8700N Series	
N8746ND	100lbs (45kg)
N8768N	130lbs (59kg)
N8768ND	130lbs (59kg)
N8700-R Series	
N8744-R	99lbs (45kg)
N8759-R	134lbs (61kg)
N8776-R	166lbs (75kg)
N8794-R	186lbs (84kg)
N8800 Series	
N8831	100lbs (45kg)
N8845	136lbs (62kg)
N8859	158lbs (72kg)
N8873	195lbs (88kg)
N8887	224lbs (102kg)
N8800-E Export Series	
N8831-E	100lbs (45kg)
N8845-E	136lbs (62kg)
N8859-E	158lbs (72kg)
N8873-E	195lbs (88kg)
N8887-E	224lbs (102kg)

Dimensions

Model	Length	Depth	Height	12x20 Pans
8100-EF Series				
8118-EF	18.20″ (46.2cm)	26″ (66cm)	23.25″ (59.1cm)	1
8132-EF	31.76″ (80.7cm)	26″ (66cm)	23.25″ (59.1cm)	2
8145-EF	45.32″ (115.1cm)	26″ (66cm)	23.25″ (59.1cm)	3
8159-EF	58.88″ (149.6cm)	26″ (66cm)	23.25″ (59.1cm)	4
8172-EF	72.44″ (184cm)	26″ (66cm)	23.25″ (59.1cm)	5
8186-EF	86″ (218.4cm)	26″ (66cm)	23.25″ (59.1cm)	6
8100-EF-E Export Series				
8118-EF-E	18.20″ (46.2cm)	26″ (66cm)	23.25″ (59.1cm)	1
8132-EF-E	31.76″ (80.7cm)	26″ (66cm)	23.25″ (59.1cm)	2
8145-EF-E	45.32″ (115.1cm)	26″ (66cm)	23.25″ (59.1cm)	3
8159-EF-E	58.88″ (149.6cm)	26″ (66cm)	23.25″ (59.1cm)	4
8172-EF-E	72.44″ (184cm)	26″ (66cm)	23.25″ (59.1cm)	5
8186-EF-E	86″ (218.4cm)	26″ (66cm)	23.25″ (59.1cm)	6
8100-EFN Series				
8148-EFN	47.66″ (121.1cm)	18″ (45.7cm)	23.25″ (59.1cm)	2
8169-EFN	69.22″ (175.8cm)	18″ (45.7cm)	23.25″ (59.1cm)	3
8191-EFN	90.78″ (230.6cm)	18″ (45.7cm)	23.25″ (59.1cm)	4
8100-EFN-E Export Series				
8148-EFN-E	47.66″ (121.1cm)	18″ (45.7cm)	23.25″ (59.1cm)	2
8169-EFN-E	69.22″ (175.8cm)	18″ (45.7cm)	23.25″ (59.1cm)	3
8191-EFN-E	90.78″ (230.6cm)	18″ (45.7cm)	23.25″ (59.1cm)	4
N8000 Series				
N8018	18″ (45.7cm)	26″ (66cm)	10.75″ (27.3cm)	1
N8030	30.75″ (78.1cm)	26″ (66cm)	10.75″ (27.3cm)	2
N8043	43.5″ (110.5cm)	26″ (66cm)	10.75″ (27.3cm)	3
N8056	56.25″ (142.9cm)	26″ (66cm)	10.75″ (27.3cm)	4
N8069	69″ (175.3cm)	26″ (66cm)	10.75″ (27.3cm)	5
N8081	81.75″ (208cm)	26″ (66cm)	10.75″ (27.3cm)	6

Model	Length	Depth	Height	12x20 Pans
N8000N Series				
N8046N	46.75″ (118.8cm)	18″ (45.7cm)	10.75″ (27.3cm)	2
N8068N	67.5″ (171.5cm)	18″ (45.7cm)	10.75″ (27.3cm)	3
N8000-R Series				
N8044-R	40.48″ (103cm)	26.05″ (66cm)	10.77″ (27cm)	2
N8059-R	57.22″ (145cm)	26.05″ (66cm)	10.77″ (27cm)	3
N8076-R	73.68″ (187cm)	26.05″ (66cm)	10.77″ (27cm)	4
N8094-R	89.89″ (228cm)	26.05″ (66cm)	10.77″ (27cm)	5
N8100B Series				
N8118B	18″ (45.7cm)	26″ (66cm)	21.87″ (55.5cm)	1
N8130B	30.75″ (78.1cm)	26″ (66cm)	21.87″ (55.5cm)	2
N8143B	43.5″ (110.5cm)	26″ (66cm)	21.87″ (55.5cm)	3
N8156B	56.25″ (142.9cm)	26″ (66cm)	21.87″ (55.5cm)	4
N8169B	69″ (175.3cm)	26″ (66cm)	21.87″ (55.5cm)	5
N8181B	81.75″ (208cm)	26″ (66cm)	21.87″ (55.5cm)	6
N8100B-E Export Series - R404A				
N8118B-E	18″ (45.7cm)	26″ (66cm)	21.87″ (55.5cm)	1
N8130B-E	30.75″ (78.1cm)	26″ (66cm)	21.87″ (55.5cm)	2
N8143B-E	43.5″ (110.5cm)	26″ (66cm)	21.87″ (55.5cm)	3
N8100B-E Export Series - R134A				
N8156B-E	56.25″ (142.9cm)	26″ (66cm)	21.87″ (55.5cm)	4
N8169B-E	69″ (175.3cm)	26″ (66cm)	21.87″ (55.5cm)	5
N8100BR Series				
N8144-BR	40.43″ (103cm)	26.05″ (66cm)	21.81″ (55cm)	2
N8159-BR	57.22″ (145cm)	26.05″ (66cm)	21.81″ (55cm)	3
N8176-BR	73.68″ (187cm)	26.05″ (66cm)	21.81″ (55cm)	4
N8194-BR	89.86″ (228cm)	26.05″ (66cm)	21.81″ (55cm)	5

Model	Length	Depth	Height	12x20 Pans
N8100-FA Series				
N8131-FA	31.25″ (79.4cm)	26.67″ (67.7cm)	26.62″ (68cm)	2
N8144-FA	44″ (111.8cm)	26.67″ (67.7cm)	26.62″ (68cm)	3
N8157-FA	56.75″ (144.1cm)	26.67″ (67.7cm)	26.62″ (68cm)	4
N8169-FA	69.5″ (176.5cm)	26.67″ (67.7cm)	28.62″ (72.7cm)	5
N8182-FA	82.25″ (208.9cm)	26.67″ (67.7cm)	28.62″ (72.7cm)	6
N8100NB Series				
N8146NB	46.75″ (118.7cm)	18″ (45.7cm)	21.81″ (55.4cm)	2
N8168NB	67.5″ (171.5cm)	18″ (45.7cm)	21.81″ (55.4cm)	3
N8100NB-E Export Series				
N8146NB-E	46.75″ (118.7cm)	18″ (45.7cm)	21.81″ (55.4cm)	2
N8168NB-E	67.5″ (171.5cm)	18″ (45.7cm)	21.81″ (55.4cm)	3
N8200 Series				
N8231	31.75" (80.6cm)	26″ (66cm)	15.75″ (40cm)	NA
N8245	45.63″ (115.9cm)	26″ (66cm)	15.75″ (40cm)	NA
N8259	59.5″ (151.1cm)	26″ (66cm)	15.75″ (40cm)	NA
N8273	73.38" (186.4cm)	26″ (66cm)	15.75″ (40cm)	NA
N8287	87.25″ (221.6cm)	26″ (66cm)	15.75″ (40cm)	NA
N8200-E Export Series				
N8231-E	31.75" (80.6cm)	26″ (66cm)	15.75″ (40cm)	NA
N8245-E	45.63″ (115.9cm)	26″ (66cm)	15.75″ (40cm)	NA
N8259-E	59.5″ (151.1cm)	26″ (66cm)	15.75″ (40cm)	NA
N8273-E	73.38" (186.4cm)	26″ (66cm)	15.75″ (40cm)	NA
N8287-E	87.25″ (221.6cm)	26″ (66cm)	15.75″ (40cm)	NA
N8200G Series				
N8231G	31.75″ (80.6cm)	25.87″ (65.7cm)	19″ (48.3cm)	NA
N8245G	45.63″ (115.9cm)	25.87″ (65.7cm)	19″ (48.3cm)	NA
N8259G	59.5″ (151.1cm)	25.87″ (65.7cm)	19″ (48.3cm)	NA
N8273G	73.38″ (186.4cm)	25.87″ (65.7cm)	19″ (48.3cm)	NA

Model	Length	Depth	Height	12x20 Pans
N8200G-E Export Series				
N8231G-E	31.75″ (80.6cm)	25.87″ (65.7cm)	19″ (48.3cm)	NA
N8245G-E	45.63″ (115.9cm)	25.87″ (65.7cm)	19″ (48.3cm)	NA
N8259G-E	59.5″ (151.1cm)	25.87″ (65.7cm)	19″ (48.3cm)	NA
N8200-ST Series				
N8230-ST	29.60" (75cm)	22.00″ (56cm)	15.70″ (40cm)	NA
N8240-ST	39.70″ (101cm)	29.60″ (75cm)	15.70″ (40cm)	NA
N8256-ST	55.60″ (141cm)	22.00″ (56cm)	15.70″ (40cm)	NA
N8258-ST	57.60" (146cm)	29.60″ (75cm)	15.70″ (40cm)	NA
N8275-ST	75.50" (192cm)	29.60″ (75cm)	15.70″ (40cm)	NA
N8600 Series				
N8630	30.75″ (78.1cm)	26″ (66cm)	23.75″ (60.3cm)	2
N8643	43.5″ (110.5cm)	26″ (66cm)	23.75″ (60.3cm)	3
N8656	56.25″ (142.9cm)	26″ (66cm)	23.75″ (60.3cm)	4
N8669	69″ (175.3cm)	26″ (66cm)	23.75″ (60.3cm)	5
N8681	81.75″ (207.6cm)	26″ (66cm)	23.75″ (60.3cm)	6
N8700D Series				
N8717-D	17.88″ (45.4cm)	26″ (66cm)	9.5″ (24cm)*	1
N8731-D	31.75″ (80.6cm)	26″ (66cm)	9.5″ (24cm)*	2
N8745-D	45.63″ (115.9cm)	26″ (66cm)	9.5″ (24cm)*	3
N8759-D	59.5″ (151.1cm)	26″ (66cm)	9.5″ (24cm)*	4
N8773-D	73.38″ (186.4cm)	26″ (66cm)	9.5″ (24cm)*	5
N8787-D	87.25″ (221.4cm)	26″ (66cm)	9.5″ (24cm)*	6
*14″ Overall height including drain connection				
N8700D-E Export Series				
N8717-D-E	17.88″ (45.4cm)	26″ (66cm)	9.5″ (24cm)*	1
N8731-D-E	31.75″ (80.6cm)	26″ (66cm)	9.5″ (24cm)*	2
N8745-D-E	45.63″ (115.9cm)	26″ (66cm)	9.5″ (24cm)*	3
N8759-D-E	59.5″ (151.1cm)	26″ (66cm)	9.5″ (24cm)*	4
N8773-D-E	73.38″ (186.4cm)	26″ (66cm)	9.5″ (24cm)*	5
N8787-D-E	87.25″ (221.4cm)	26″ (66cm)	9.5″ (24cm)*	6
*14″ Overall height including drain connection				

Model	Length	Depth	Height	12x20 Pans
N8700DESP Series				
N8717-DESP	17.89″ (45cm)	26″ (66cm)	9.5″ (24cm)*	1
N8731-DESP	31.76″ (81cm)	26″ (66cm)	9.5″ (24cm)*	2
N8745-DESP	45.63″ (116cm)	26″ (66cm)	9.5″ (24cm)*	3
N8759-DESP	59.50″ (151cm)	26″ (66cm)	9.5″ (24cm)*	4
N8773-DESP	73.37″ (186cm)	26″ (66cm)	9.5″ (24cm)*	5
N8787-DESP	87.24″ (222cm)	26″ (66cm)	9.5″ (24cm)*	6
*14″ Overall height including drain connection				
N8700-D-ESP-E Export Series				
N8717-D-ESP-E	17.89″ (45cm)	26″ (66cm)	9.5″ (24cm)*	1
N8731-D-ESP-E	31.76″ (81cm)	26″ (66cm)	9.5″ (24cm)*	2
N8745-D-ESP-E	45.63″ (116cm)	26″ (66cm)	9.5″ (24cm)*	3
N8759-D-ESP-E	59.50″ (151cm)	26″ (66cm)	9.5″ (24cm)*	4
N8773-D-ESP-E	73.37″ (186cm)	26″ (66cm)	9.5″ (24cm)*	5
N8787-D-ESP-E	87.24″ (222cm)	26″ (66cm)	9.5″ (24cm)*	6
*14″ Overall height including drain connection				
N8700N Series				
N8746ND	45.61″ (116cm)	15.87″ (40cm)	9.5″ (24cm)*	2
N8768N	67.48″ (172cm)	15.87″ (40cm)	9.5″ (24cm)*	3
N8768ND	67.48″ (172cm)	15.87″ (40cm)	9.5″ (24cm)*	3
N8700-R Series				
N8744-R	40.48″ (103cm)	26.05″ (66cm)	9.5″ (24cm)*	2
N8759-R	57.22″ (145cm)	26.05″ (66cm)	9.5″ (24cm)*	3
N8776-R	73.68″ (187cm)	26.00″ (66cm)	9.5″ (24cm)*	4
N8794-R	89.80″ (228cm)	25.91″ (66cm)	9.5″ (24cm)*	5
*14″ Overall height including drain connection				
N8800 Series				
N8831	31.75″ (80.6cm)	26″ (66cm)	11″ (27.9cm)	2
N8845	45.63″ (115.9cm)	26″ (66cm)	11″ (27.9cm)	3
N8859	59.5″ (151.1cm)	26″ (66cm)	11″ (27.9cm)	4
N8873	73.38″ (186.4cm)	26″ (66cm)	11″ (27.9cm)	5
N8887	87.25″ (221.6cm)	26″ (66cm)	11″ (27.9cm)	6

Model	Length	Depth	Height	12x20 Pans
N8800-E Export Series				
N8831-E	31.75″ (80.6cm)	26″ (66cm)	11″ (27.9cm)	2
N8845-E	45.63″ (115.9cm)	26″ (66cm)	11″ (27.9cm)	3
N8859-E	59.5″ (151.1cm)	26″ (66cm)	11″ (27.9cm)	4
N8873-E	73.38″ (186.4cm)	26″ (66cm)	11″ (27.9cm)	5
N8887-E	87.25″ (221.6cm)	26″ (66cm)	11″ (27.9cm)	6

Cutout Installation Dimensions

A gasket is installed in the flange of each unit. The weight of the unit on the gasket forms a seal preventing liquids from seeping into the cut-out opening.

Model	Counter Cutout Dimensions	Control Panel Cutout Dimensions
8100-EF Series		
8118-EF	17″ x 25″ (43.2cm x 63.5cm)	NA
8132-EF	30.75″ x 25″ (78.1cm x 63.5cm)	NA
8145-EF	44.25″ x 25″ (112.4cm x 63.5cm)	NA
8159-EF	57.87″ x 25″ (147cm x 63.5cm)	NA
8172-EF	71.5″ x 25″ (181.6cm x 63.5cm)	NA
8186-EF	85″ x 25″ (215.9cm x 63.5cm)	NA
8100-EF-E Export Series		
8118-EF-E	17″ x 25″ (43.2cm x 63.5cm)	NA
8132-EF-E	30.75″ x 25″ (78.1cm x 63.5cm)	NA
8145-EF-E	44.25″ x 25″ (112.4cm x 63.5cm)	NA
8159-EF-E	57.87″ x 25″ (147cm x 63.5cm)	NA
8172-EF-E	71.5″ x 25″ (181.6cm x 63.5cm)	NA
8186-EF-E	85″ x 25″ (215.9cm x 63.5cm)	NA
8100-EFN Series		
8148-EFN	46.88″ x 17.25″ (119.1cm x 43.8cm)	NA
8169-EFN	68.5″ x 17.25″ (174cm x 43.8cm)	NA
8191-EFN	90″ x 17.25″ (228.6cm x 43.8cm)	NA
8100-EFN-E Export Series		
8148-EFN-E	46.88″ x 17.25″ (119.1cm x 43.8cm)	NA
8169-EFN-E	68.5″ x 17.25″ (174cm x 43.8cm)	NA
8191-EFN-E	90″ x 17.25″ (228.6cm x 43.8cm)	NA

Model	Counter Cutout Dimensions	Control Panel Cutout Dimensions
N8000 Series		
N8018	17″ x 25″ (43.2cm x 63.5cm)	NA
N8030	29.75″ x 25″ (75.6cm x 63.5cm)	NA
N8043	42.5″ x 25″ (107.9cm x 63.5cm)	NA
N8056	55.25″ x 25″ (140.3cm x 63.5cm)	NA
N8069	68″ x 25″ (172.7cm x 63.5cm)	NA
N8081	80.75″ x 25″ (205.1cm x 63.5cm)	NA
N8000N Series		
N8046N	45.75″ x 17″ (116.2cm x 43.2cm)	NA
N8068N	66.50″ x 17″ (168.9cm x 43.2cm)	NA
N8000-R Series		
N8044-R	See drawing on page 16	NA
N8059-R	See drawing on page 16	NA
N8076-R	See drawing on page 16	NA
N8094-R	See drawing on page 16	NA
N8100B Series		
N8118B	17″ X 25″ (43.2cm x 63.5cm)	NA
N8130B	29.75″ x 25″ (75.6cm x 63.5cm)	NA
N8143B	42.50″ X 25″ (108.6cm x 63.5cm)	NA
N8156B	55.25″ x 25″ (140.3cm x 63.5cm)	NA
N8169B	68″ X 25″ (172.7cm x 63.5cm)	NA
N8181B	80.75″ x 25″ (205.1cm x 63.5cm)	NA
N8100B-E Export Series - R404A		
N8118B-E	17″ X 25″ (43.2cm x 63.5cm)	NA
N8130B-E	29.75″ x 25″ (75.6cm x 63.5cm)	NA
N8143B-E	42.50″ X 25″ (108.6cm x 63.5cm)	NA
N8100B-E Export Series - R134A		
N8156B-E	55.25″ x 25″ (140.3cm x 63.5cm)	NA
N8169B-E	68″ X 25″ (172.7cm x 63.5cm)	NA

Model	Counter Cutout Dimensions	Control Panel Cutout Dimensions
N8100-FA Series		
N8144-BR	See drawing on page 16	NA
N8159-BR	See drawing on page 16	NA
N8176-BR	See drawing on page 16	NA
N8194-BR	See drawing on page 16	NA
N8100BR Series		
N8131-FA	30.25″ x 25.5″ (76.8cm x 64.8cm)	NA
N8144-FA	43″ x 25.5″ 109.2cm x 64.8cm)	NA
N8157-FA	55.75″ x 25.5″ (141.6cm x 64.8cm)	NA
N8169-FA	68.5″ x 25.5″ 174.0cm x 64.8cm)	NA
N8182-FA	81.25″ x 25.5″ (206.4cm x 64.8cm)	NA
N8100NB Series		
N8146NB	45.75″ x 17″ (113.7cm x 43.2cm)	NA
N8168NB	66.5″ x 17″ (168.9cm x 43.2cm)	NA
N8100NB-E Export Series		
N8146NB-E	45.75″ x 17″ (113.7cm x 43.2cm)	NA
N8168NB-E	66.5″ x 17″ (168.9cm x 43.2cm)	NA
N8200 Series		
N8231	30.75″ x 25" (78.1cm x 63.5cm)	NA
N8245	44.63″ x 25″ (113.3cm x 63.5cm)	NA
N8259	58.50″ x 25″ (148.6cm x 63.5cm)	NA
N8273	72.38″ x 25″ (183.8cm x 63.5cm)	NA
N8287	86.25″ x 25″ (219.1cm x 63.5cm)	NA
N8200-E Export Series		
N8231-E	30.75″ x 25" (78.1cm x 63.5cm)	NA
N8245-E	44.63″ x 25″ (113.3cm x 63.5cm)	NA
N8259-E	58.50″ x 25″ (148.6cm x 63.5cm)	NA
N8273-E	72.38″ x 25″ (183.8cm x 63.5cm)	NA
N8287-E	86.25″ x 25″ (219.1cm x 63.5cm)	NA

Model	Counter Cutout Dimensions	Control Panel Cutout Dimensions
N8200G Series		
N8231G	30.75″ X 25″ (78.1cm x 63.5cm)	NA
N8245G	44.63″ x 25″ (113.4cm x 63.5cm)	NA
N8259G	58.5″ x 25″ (148.6cm x 63.5cm)	NA
N8273G	72.38″ x 25″ (183.8cm x 63.5cm)	NA
N8200G-E Export Series		
N8231G-E	30.75″ X 25″ (78.1cm x 63.5cm)	NA
N8245G-E	44.63″ x 25″ (113.4cm x 63.5cm)	NA
N8259G-E	58.5″ x 25″ (148.6cm x 63.5cm)	NA
N8200-ST Series		
N8230-ST	28.60″ x 21.10" (73cm x 54cm)	NA
N8240-ST	38.65″ x 28.75″ (98cm x 73cm)	NA
N8256-ST	54.60″ x 21.10″ (139cm x 54cm)	NA
N8258-ST	56.60″ x 28.75″ (144cm x 73cm)	NA
N8275-ST	74.50" x 28.75" (189cm x 73cm)	NA
N8600 Series		
N8630	29.75″ X 25″ (75.5cm x 63.5cm)	12.25″ x 4.25″ x 7.00″ (31.1cm x 10.8cm x 17.8cm)
N8643	42.50″ x 25″ (107.9cm x 63.5cm)	12.25″ x 4.25″ x 7.00″ (31.1cm x 10.8cm x 17.8cm)
N8656	55.25″ x 25″ (140.3cm x 63.5cm)	12.25″ x 4.25″ x 7.00″ (31.1cm x 10.8cm x 17.8cm)
N8669	68″ x 25″ (172.7cm x 63.5cm)	12.25″ x 4.25″ x 7.00″ (31.1cm x 10.8cm x 17.8cm)
N8681	80.75″ x 25″ (205.1cm x 63.5cm)	12.25″ x 4.25″ x 7.00″ (31.1cm x 10.8cm x 17.8cm)
N8700D Series		
N8717-D	16.88″ X 25″ (42.8cm x 63.5cm)	7.00″ x 4.62″ x 7.00″ (17.8cm x 11.7cm x 17.8cm)
N8731-D	30.75″ x 25″ (78.1cm x 63.5cm)	10.31″ x 4.62″ x 7.00″ (26.2cm x 11.7cm x 17.8cm)
N8745-D	44.62″ x 25″ (113.3cm x 63.5cm)	14.5″ x 4.62″ x 7.00″ (36.8cm x 11.7cm x 17.8cm)
N8759-D	58.5″ x 25″ (148.6cm x 63.5cm)	18.69″ x 4.62″ x 7.00″ (47.5cm x 11.7cm x 17.8cm)
N8773-D	72.37″ x 25″ (183.8cm x 63.5cm)	22.88″ x 4.62″ x 7.00″ (58.1cm x 11.7cm x 17.8cm)
N8787-D	86.25″ x 25″ (219.1cm x 63.5cm)	27″ x 4.62″ x 7.00″ (68.6cm x 11.7cm x 17.8cm)

Model	Counter Cutout Dimensions	Control Panel Cutout Dimensions
N8700D-E Export Series		
N8717-D-E	16.88″ X 25″ (42.8cm x 63.5cm)	7.00″ x 4.62″ x 7.00″ (17.8cm x 11.7cm x 17.8cm)
N8731-D-E	30.75″ x 25″ (78.1cm x 63.5cm)	10.31″ x 4.62″ x 7.00″ (26.2cm x 11.7cm x 17.8cm)
N8745-D-E	44.62″ x 25″ (113.3cm x 63.5cm)	14.5″ x 4.62″ x 7.00″ (36.8cm x 11.7cm x 17.8cm)
N8759-D-E	58.5″ x 25″ (148.6cm x 63.5cm)	18.69″ x 4.62″ x 7.00″ (47.5cm x 11.7cm x 17.8cm)
N8773-D-E	72.37″ x 25″ (183.8cm x 63.5cm)	22.88″ x 4.62″ x 7.00″ (58.1cm x 11.7cm x 17.8cm)
N8787-D-E	86.25″ x 25″ (219.1cm x 63.5cm)	27″ x 4.62″ x 7.00″ (68.6cm x 11.7cm x 17.8cm)
N8700DESP Series		
N8717-DESP	16.87″ X 25.00″ (43cm x 64cm)	5.00″ x 6.88″ x 7.50″ (13cm x 17cm x 19cm)
N8731-DESP	30.75″ x 25.00″ (78cm x 64cm)	5.00″ x 11.88″ x 7.50″ (13cm x 30cm x 19cm)
N8745-DESP	44.62″ x 25.00″ (113cm x 64cm)	5.00″ x 17.38″ x 7.50″ (13cm x 44cm x 19cm)
N8759-DESP	58.50″ x 25.00″ (149cm x 64cm)	5.00″ x 22.88″ x 7.50″ (13cm x 58cm x 19cm)
N8773-DESP	72.37″ x 25.00″ (184cm x 64cm)	5.00″ x 28.38″ x 7.50″ (13cm x 72cm x 19cm)
N8787-DESP	86.25″ x 25.00″ (219cm x 64cm)	5.00″ x 33.88″x 7.50″ (13cm x 86cm x 19cm)
N8700-D-ESP-E Export Series		
N8717-D-ESP-E	16.87″ X 25.00″ (43cm x 64cm)	5.00″ x 6.88″ x 7.50″ (13cm x 17cm x 19cm)
N8731-D-ESP-E	30.75″ x 25.00″ (78cm x 64cm)	5.00″ x 11.88″ x 7.50″ (13cm x 30cm x 19cm)
N8745-D-ESP-E	44.62″ x 25.00″ (113cm x 64cm)	5.00″ x 17.38″ x 7.50″ (13cm x 44cm x 19cm)
N8759-D-ESP-E	58.50″ x 25.00″ (149cm x 64cm)	5.00″ x 22.88″ x 7.50″ (13cm x 58cm x 19cm)
N8773-D-ESP-E	72.37″ x 25.00″ (184cm x 64cm)	5.00″ x 28.38″ x 7.50″ (13cm x 72cm x 19cm)
N8787-D-ESP-E	86.25″ x 25.00″ (219cm x 64cm)	5.00″ x 33.88″x 7.50″ (13cm x 86cm x 19cm)
N8700N Series		
N8746ND	44.62″x 15.0″ (113.3cm x 38.1cm)	10.31″x 4.62″x 7.00″ (26.2cm x 11.7cm x 17.8cm)
N8768N	66.50″x 15.0″ (168.9cm x 38.1cm)	14.50″x 4.62″x 7.00″ (36.8cm x 11.7cm x 17.8cm)
N8768ND	66.50″x 15.0″ (168.9cm x 38.1cm)	14.50″x 4.62″x 7.00″ (36.8cm x 11.7cm x 17.8cm)
N8700-R Series		
N8744-R	See drawing on page 16	10.31″ x 4.62″ x 7.00″ (26cm x 12cm x 18cm)
N8759-R	See drawing on page 16	14.5″ x 4.62″ x 7.00″ (37cm x 12cm x 18cm)
N8776-R	See drawing on page 16	18.69″ x 4.62″ x 7.00″ (47cm x 12cm x 18cm)
N8794-R	See drawing on page 16	22.88″ x 4.62″ x 7.00″ (58cm x 12cm x 18cm)

Model	Counter Cutout Dimensions	Control Panel Cutout Dimensions
N8800 Series		
N8831	30.75″ X 25″ (78.1cm x 63.5cm)	12.25″ x 4.25″ x 7.00″ (31.1cm x 10.8cm x 17.8cm)
N8845	44.63″ x 25″ (113.4cm x 63.5cm)	12.25″ x 4.25″ x 7.00″ (31.1cm x 10.8cm x 17.8cm)
N8859	58.5″ x 25″ (148.6cm x 63.5cm)	12.25″ x 4.25″ x 7.00″ (31.1cm x 10.8cm x 17.8cm)
N8873	72.38″ x 25″ (183.8cm x 63.5cm)	12.25″ x 4.25″ x 7.00″ (31.1cm x 10.8cm x 17.8cm)
N8887	86.25″ x 25″ (219.1cm x 63.5cm)	12.25″ x 4.25″ x 7.00″ (31.1cm x 10.8cm x 17.8cm)
N8800-E Export Series		
N8831-E	30.75″ X 25″ (78.1cm x 63.5cm)	12.25″ x 4.25″ x 7.00″ (31.1cm x 10.8cm x 17.8cm)
N8845-E	44.63″ x 25″ (113.4cm x 63.5cm)	12.25″ x 4.25″ x 7.00″ (31.1cm x 10.8cm x 17.8cm)
N8859-E	58.5″ x 25″ (148.6cm x 63.5cm)	12.25″ x 4.25″ x 7.00″ (31.1cm x 10.8cm x 17.8cm)
N8873-E	72.38″ x 25″ (183.8cm x 63.5cm)	12.25″ x 4.25″ x 7.00″ (31.1cm x 10.8cm x 17.8cm)
N8887-E	86.25″ x 25″ (219.1cm x 63.5cm)	12.25″ x 4.25″ x 7.00″ (31.1cm x 10.8cm x 17.8cm)

CURVED DROP-IN CUTOUT DETAILS

2 pan standard curved drop-in cutout detail for models:

- N8044-R
- N8144-BR
- N8744-R

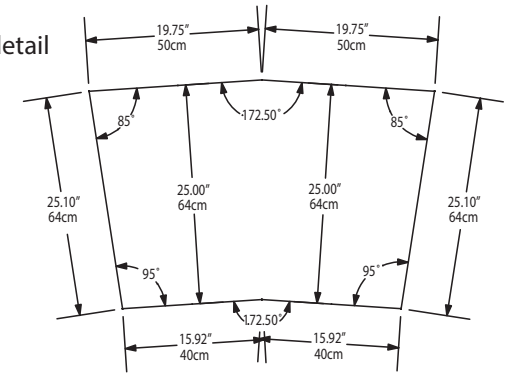

3 pan standard curved drop-in cutout detail for models:

- N8059-R
- N8159-BR
- N8759-R

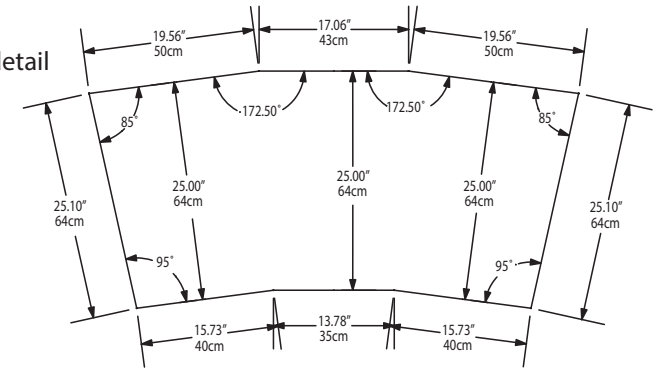

4 pan standard curved drop-in cutout detail for models:

- N8076-R
- N8176-BR
- N8776-R

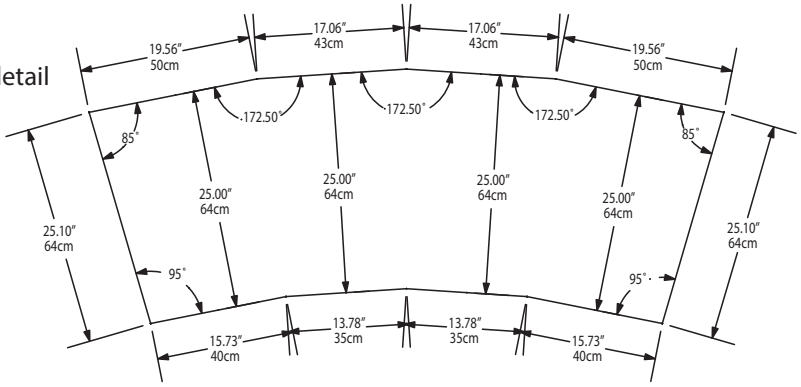

5 pan standard curved drop-in cutout detail or models:

- N8094-R
- N8194-BR
- N8794-R

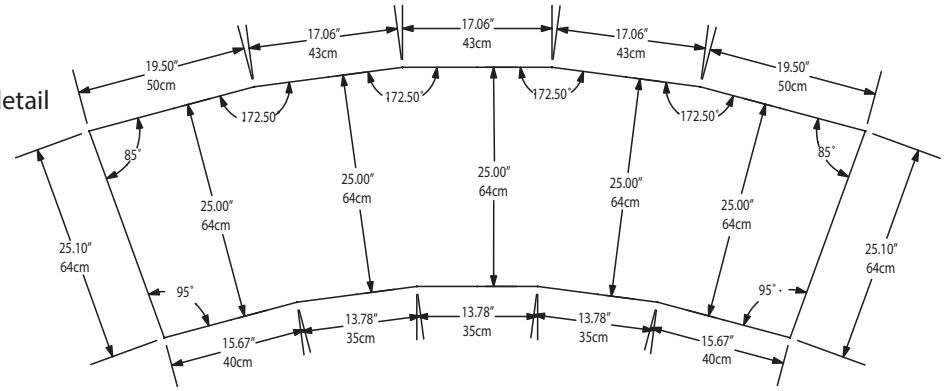

Hot Food Wells Control Panel Installation

Hot food well controls are mounted in a control panel, designed to be installed at a "remote" location. The control panel should be installed so that the indicator light for each control is to the right of the control. Conduit runs between the pans and the remote control panel to facilitate remote installation.

- All N8600 series unites have 36" (91cm) of conduit.
- All N8700 series units have 48" (122cm) of conduit.
- All N8800 Series units have 24" (61cm) of conduit.

ALL 8700 SERIES CONTROL PANEL INSTALLATION

The control panel is designed to be installed on the side opposite the drains.

If you choose to install the control panel on the same side as the drains the control panel will either be upside down or the knobs will control the opposite wells.

Infinite control shown, directions also apply to digital control

N8100-FA Unit Assembly

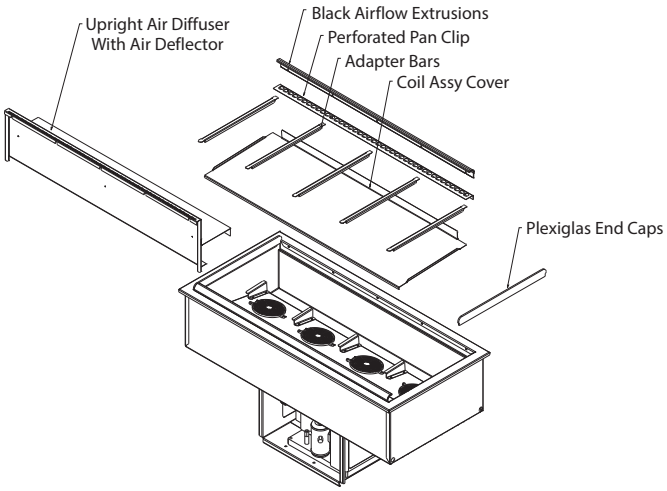

Electrical Service

⚠ DANGER

Check all wiring connections, including factory terminals, before operation. Connections can become loose during shipment and installation.

⚠ Warning

This appliance must be grounded and all field wiring must conform to all applicable local and national codes. Refer to rating plate for proper voltage. It is the responsibility of the end user to provide the disconnect means to satisfy the authority having jurisdiction.

VOLTAGE

All electrical work, including wire routing and grounding, must conform to local, state and national electrical codes.

The following precautions must be observed:

- The equipment must be grounded.
- A separate fuse/circuit breaker must be provided for each unit.
- A qualified electrician must determine proper wire size dependent upon location, materials used and length of run (minimum circuit ampacity can be used to help select the wire size).
- The maximum allowable voltage variation is ±10% of the rated voltage at equipment start-up (when the electrical load is highest).
- Check all green ground screws, cables and wire connections to verify they are tight before start-up.

GROUND FAULT CIRCUIT INTERRUPTER

Ground Fault Circuit Interrupter (GFCI/GFI) protection is a system that shuts down the electric circuit (opens it) when it senses an unexpected loss of power, presumably to ground. Manitowoc does not recommend the use of GFCI/GFI circuit protection to energize our equipment. If code requires the use of a GFCI/GFI then you must follow the local code. The circuit must be dedicated, sized properly and there must be a panel GFCI/GFI breaker. We do not recommend the use of GFCI/GFI outlets to energize our equipment as they are known for more intermittent nuisance trips than panel breakers.

RATED AMPERAGES, HORSEPOWER, VOLTAGE & POWER CORD CHART

Units with plugs are supplied with approximately 6ft (183cm) cords.

Model	V, Hz, Ph	Amps	H.P.	Plug
8100-EF Series				
8118-EF	115, 60, 1	7.5	1/4	NEMA 5-15P
8132-EF	115, 60, 1	7.5	1/4	NEMA 5-15P
8145-EF	115, 60, 1	7.5	1/4	NEMA 5-15P
8159-EF	115, 60, 1	7.5	1/4	NEMA 5-15P
8172-EF	115, 60, 1	7.5	1/4	NEMA 5-15P
8186-EF	115, 60, 1	8	1/3	NEMA 5-15P
8100-EF-E Export Series				
8118-EF-E	230-240, 50, 1	2.5 Amps / 600 Watts	1/4	Varies Per Destination
8132-EF-E	230-240, 50, 1	2.5 Amps / 600 Watts	1/4	Varies Per Destination
8145-EF-E	230-240, 50, 1	2.5 Amps / 600 Watts	1/4	Varies Per Destination
8159-EF-E	230-240, 50, 1	2.5 Amps / 600 Watts	1/4	Varies Per Destination
8172-EF-E	230-240, 50, 1	2.5 Amps / 600 Watts	1/4	Varies Per Destination
8186-EF-E	230-240, 50, 1	2.5 Amps / 600 Watts	1/4	Varies Per Destination
8100-EFN Series				
8148-EFN	115, 60, 1	7.5	1/4	NEMA 5-15P
8169-EFN	115, 60, 1	7.5	1/4	NEMA 5-15P
8191-EFN	115, 60, 1	7.5	1/4	NEMA 5-15P
8100-EFN-E Export Series				
8148-EFN-E	230-240, 50, 1	2.5 Amps / 600 Watts	1/4	Varies Per Destination
8169-EFN-E	230-240, 50, 1	2.5 Amps / 600 Watts	1/4	Varies Per Destination
8191-EFN-E	230-240, 50, 1	2.5 Amps / 600 Watts	1/4	Varies Per Destination
N8000 Series - NA				
N8000N Series - NA				
N8000-R Series - NA				
N8100B Series				
N8118B	115, 60, 1	3.7	1/5	NEMA 5-15P
N8130B	115, 60, 1	3.7	1/5	NEMA 5-15P
N8143B	115, 60, 1	3.7	1/5	NEMA 5-15P
N8156B	115, 60, 1	5.6	1/4	NEMA 5-15P
N8169B	115, 60, 1	5.6	1/4	NEMA 5-15P
N8181B	115, 60, 1	7.3	1/3	NEMA 5-15P
N8100B-E Export Series - R404A				
N8118B-E	230-240, 50, 1	1.5 Amps / 360 Watts	1/5	Varies Per Destination
N8130B-E	230-240, 50, 1	1.5 Amps / 360 Watts	1/5	Varies Per Destination
N8143B-E	230-240, 50, 1	1.5 Amps / 360 Watts	1/5	Varies Per Destination
N8100B-E Export Series - R134A				
N8156B-E	230-240, 50, 1	2.5 Amps / 600 Watts	1/4	Varies Per Destination
N8169B-E	230-240, 50, 1	2.5 Amps / 600 Watts	1/4	Varies Per Destination

Model	V, Hz, Ph	Amps	H.P.	Plug
N8100BR Series				
N8144-BR	115, 60, 1	4.0	1/5	NEMA 5-15P
N8159-BR	115, 60, 1	7.0	1/4	NEMA 5-15P
N8176-BR	115, 60, 1	7.3	1/3	NEMA 5-15P
N8194-BR	115, 60, 1	8.0	1/3	NEMA 5-15P
N8100-FA Series				
N8131-FA	115, 60, 1	7.8	1/4	NEMA 5-15P
N8144-FA	115, 60, 1	9.2	1/2	NEMA 5-15P
N8157-FA	115, 60, 1	9.2	1/2	NEMA 5-15P
N8169-FA	115, 60, 1	14.8	3/4	NEMA 5-20P
N8182-FA	115, 60, 1	14.8	3/4	NEMA 5-20P
N8100NB Series				
N8146NB	115, 60, 1	3.7	1/5	NEMA 5-15P
N8168NB	115, 60, 1	5.6	1/4	NEMA 5-15P
N8100NB-E Export Series				
N8146NB-E	230-240, 50, 1	1.5 Amps / 360 Watts	1/5	Varies Per Destination
N8168NB-E	230-240, 50, 1	1.5 Amps / 360 Watts	1/5	Varies Per Destination
N8200 Series				
N8231	115, 60, 1	7.5	1/4	NEMA 5-15P
N8245	115, 60, 1	7.5	1/4	NEMA 5-15P
N8259	115, 60, 1	7.5	1/4	NEMA 5-15P
N8273	115, 60, 1	8.0	1/4	NEMA 5-15P
N8287	115, 60, 1	8.0	1/3	NEMA 5-15P
N8200-E Export Series				
N8231-E	230-240, 50, 1	1.5 Amps / 360 Watts	1/5	Varies Per Destination
N8245-E	230-240, 50, 1	1.5 Amps / 360 Watts	1/5	Varies Per Destination
N8259-E	230-240, 50, 1	2.5 Amps / 600 Watts	1/4	Varies Per Destination
N8273-E	230-240, 50, 1	2.5 Amps / 600 Watts	1/4	Varies Per Destination
N8287-E	230-240, 50, 1	2.8 Amps / 650 Watts	1/3	Varies Per Destination
N8200G Series				
N8231G	115, 60, 1	7.5	1/4	NEMA 5-15P
N8245G	115, 60, 1	7.5	1/4	NEMA 5-15P
N8259G	115, 60, 1	8.0	1/3	NEMA 5-15P
N8273G	115, 60, 1	9.0	1/2	NEMA 5-15P
N8200G-E Export Series				
N8231G-E	230-240, 50, 1	1.5 Amps / 360 Watts	1/5	Varies Per Destination
N8245G-E	230-240, 50, 1	1.5 Amps / 360 Watts	1/5	Varies Per Destination
N8259G-E	230-240, 50, 1	2.8 Amps / 672 Watts	1/3	Varies Per Destination
N8200-ST Series				
N8230-ST	115, 60, 1	7.5	1/4	NEMA 5-15P
N8240-ST	115, 60, 1	7.5	1/4	NEMA 5-15P
N8256-ST	115, 60, 1	7.5	1/4	NEMA 5-15P
N8258-ST	115, 60, 1	7.5	1/4	NEMA 5-15P
N8275-ST	115, 60, 1	7.5	1/4	NEMA 5-15P
N8600 Series				
N8630	120, 60, 1	24.0	1/4	Hard Wire
N8643	120/240, 60, 1	21.0	1/4	Hard Wire
N8656	120/240, 60, 1	21.0	1/4	Hard Wire
N8669	120/240, 60, 1	43.0	1/4	Hard Wire
N8681	120/240, 60, 1	43.0	1/3	Hard Wire

Model	V, Hz, Ph	Amps	H.P.	Plug
N8700D Series				
N8717-D	120, 60, 1	8.3	NA	Hard Wire
N8731-D	120, 60, 1	16.6	NA	Hard Wire
N8745-D	208-230, 60, 1	15.0/16.0	NA	Hard Wire
N8759-D	208-230, 60, 1	20.0/22.0	NA	Hard Wire
N8773-D	208-230, 60, 1	24.0/27.0	NA	Hard Wire
N8787-D	208-230, 60, 1	29.0/32.0	NA	Hard Wire
N8700D-E Export Series				
N8717-D-E	240, 50, 1	6.0 Amps / 1450 Watts	NA	Hard Wire
N8731-D-E	240, 50, 1	12.1 Amps / 2900 Watts	NA	Hard Wire
N8745-D-E	240, 50, 1	18.1 Amps/ 4350 Watts	NA	Hard Wire
N8759-D-E	240, 50, 1	24.2 Amps / 5800 Watts	NA	Hard Wire
N8773-D-E	240, 50, 1	30.2 Amps / 7250 Watts	NA	Hard Wire
N8787-D-E	240, 50, 1	36.3 Amps / 8700 Watts	NA	Hard Wire
N8700DESP Series				
N8717-DESP	208-230, 60, 1	2.4/2.7	NA	Hard Wire
N8731-DESP	208-230, 60, 1	4.8/5.4	NA	Hard Wire
N8745-DESP	208-230, 60, 1	7.2/8.1	NA	Hard Wire
N8759-DESP	208-230, 60, 1	9.6/10.8	NA	Hard Wire
N8773-DESP	208-230, 60, 1	12.0/13.5	NA	Hard Wire
N8787-DESP	208-230, 60, 1	14.4/16.2	NA	Hard Wire
N8700-D-ESP-E Export Series				
N8717-D-ESP-E	240, 50, 1	2.1 Amps / 500 Watts	NA	Hard Wire
N8731-D-ESP-E	240, 50, 1	4.2 Amps / 1000 Watts	NA	Hard Wire
N8745-D-ESP-E	240, 50, 1	6.3 Amps / 1500 Watts	NA	Hard Wire
N8759-D-ESP-E	240, 50, 1	8.4 Amps / 2000 Watts	NA	Hard Wire
N8773-D-ESP-E	240, 50, 1	10.5 Amps / 2500 Watts	NA	Hard Wire
N8787-D-ESP-E	240, 50, 1	12.6 Amps / 3000 Watts	NA	Hard Wire
N8700N Series				
N8746ND	120, 60, 1	17.0	NA	Hard Wire
N8768N	208-230, 60, 1	15.0/16.0	NA	Hard Wire
N8768ND	208-230, 60, 1	15.0/16.0	NA	Hard Wire
N8700-R Series				
N8744-R	120, 60, 1	16.6	NA	Hard Wire
N8759-R	208-230, 60, 1	15.0/16.0	NA	Hard Wire
N8776-R	208-230, 60, 1	20.0/22.0	NA	Hard Wire
N8794-R	208-230, 60, 1	24.0/27.0	NA	Hard Wire
N8800 Series				
N8831	120, 60, 1	17.0	NA	Hard Wire
N8845	208-230, 60, 1	15.0/16.0	NA	Hard Wire
N8859	208-230, 60, 1	20.0/22.0	NA	Hard Wire
N8873	208-230, 60, 1	24.0/27.0	NA	Hard Wire
N8887	208-230, 60, 1	29.0/32.0	NA	Hard Wire

Model	V, Hz, Ph	Amps	H.P.	Plug
N8800-E Export Series				
N8831-E	240, 50, 1	12.1 Amps / 2900 Watts	NA	Hard Wire
N8845-E	240, 50, 1	18.1 Amps/ 4350 Watts	NA	Hard Wire
N8859-E	240, 50, 1	24.2 Amps / 5800 Watts	NA	Hard Wire
N8873-E	240, 50, 1	30.2 Amps / 7250 Watts	NA	Hard Wire
N8887-E	240, 50, 1	36.3 Amps / 8700 Watts	NA	Hard Wire

Refrigeration

Temperature Class for all Export units is N.

Model	BTU Load	Evap BTU/TD/ TEMP	Sys Cap	Refrig. Charge
8100-EF Series				
8118-EF	204	19/50º/-15°	928	24.0oz
8132-EF	379	26/42º/-7°	1112	24.0oz
8145-EF	569	35/36º/-1°	1259	24.0oz
8159-EF	758	43/32º/3°	1373	24.0oz
8172-EF	948	51/29º/6°	1469	24.0oz
8186-EF	1138	59/26º/9°	1529	24.0oz
8100-EF-E Export Series				
8118-EF-E	204	19/50º/-15°	928	454g
8132-EF-E	379	26/42º/-7°	1112	454g
8145-EF-E	569	35/36º/-1°	1259	454g
8159-EF-E	758	43/32º/3°	1373	454g
8172-EF-E	948	51/29º/6°	1469	454g
8186-EF-E	1138	59/26º/9°	1529	454g
8100-EFN Series				
8148-EFN	379	26/42º/-7°	1112	24.0oz
8169-EFN	569	35/36º/-1°	1259	24.0oz
8191-EFN	758	43/32º/13°	1373	24.0oz
8100-EFN-E Export Series				
8148-EFN-E	379	26/42º/-7°	1112	454g
8169-EFN-E	569	35/36º/-1°	1259	454g
8191-EFN-E	758	43/32º/13°	1373	454g
N8000 Series NA				
N8000N Series - NA				
N8000-R Series - NA				
N8100B Series				
N8118B	204	19/38º/-3º	1010	6.0oz
N8130B	379	26/31º/4º	1298	7.5oz
N8143B	569	35/26º/9º	1298	9.2oz
N8156B	758	43/32º/3º	1961	6.5oz
N8169B	948	51/29º/6º	2088	6.5oz
N8181B	1138	59/32º/3º	2088	7.5oz
N8100B-E Export Series - R404A				
N8118B-E	204	19/38º/-3º	708	454g
N8130B-E	379	26/31º/4º	812	454g
N8143B-E	569	35/26º/9º	889	454g
N8100B-E Export Series - R134A				
N8156B-E	758	43/32º/3º	1373	454g
N8169B-E	948	51/29º/6º	1469	454g

Model	BTU Load	Evap BTU/TD/ TEMP	Sys Cap	Refrig. Charge
N8100BR Series				
N8144-BR	379	26/31º/4°	812	9.4oz
N8159-BR	569	35/26º/9º	889	6.5oz
N8176-BR	758	43/32º/3º	1373	7.5oz
N8194-BR	948	51/29º/6º	1469	7.9oz
N8100-FA Series				
N8131-FA	1339	140/15º/20º	2154	16.0oz
N8144-FA	2035	140/22º/13º	3142	32.0oz
N8157-FA	2731	280/14º/21°	3806	32.0oz
N8169-FA	3374	280/20º/15°	5545	48.0oz
N8182-FA	4070	280/20º/15°	5545	48.0oz
N8100NB Series				
N8146NB	454	17/40º/-5º	680	7.9oz
N8168NB	676	26/31º/4º	804	6.5oz
N8100NB-E Export Series				
N8146NB-E	454	17/40º/-5º	680	454g
N8168NB-E	676	26/31º/4º	804	454g
N8200 Series				
N8231	379	26/42º/-7°	1112	24.0oz
N8245	569	35/36º/-1°	1259	24.0oz
N8259	758	43/32º/3°	1373	24.0oz
N8273	948	51/29º/6°	1469	24.0oz
N8287	1138	59/30º/5°	1787	24.0oz
N8200-E Export Series				
N8231-E	379	26/42º/-7°	1112	454g
N8245-E	569	35/36º/-1°	1259	454g
N8259-E	758	43/32º/3°	1373	454g
N8273-E	948	51/29º/6°	1469	454g
N8287-E	1138	59/30º/5°	1787	454g
N8200G Series				
N8231G	379	26/42º/-7°	1112	16.0oz
N8245G	569	35/36º/-1°	1259	16.0oz
N8259G	758	43/37º/-2°	1572	24.0oz
N8273G	948	51/43º/-8°	2183	32.0oz
N8200G-E Export Series				
N8231G-E	379	26/42º/-7°	1112	454g
N8245G-E	569	35/36º/-1°	1259	454g
N8259G-E	758	43/37º/-2°	1572	454g
N8200-ST Series				
N8230-ST	332	26/44°/-9°	1128	16.0oz
N8240-ST	559	35/37°/-2°	1295	16.0oz
N8256-ST	624	39/35°/0°	1359	16.0oz
N8258-ST	870	44/33°/2°	1422	16.0oz
N8275-ST	1140	53/29°/6°	1520	16.0oz
N8600 Series				
N8630	379	26/42º/-7°	1112	16.0oz
N8643	569	35/36º/-1°	1259	16.0oz
N8656	758	43/32º/3°	1373	16.0oz
N8669	948	51/29º/6°	1469	16.0oz
N8681	1138	59/30º/5°	1787	24.0oz
N8700D Series - NA				
N8700D-E Export Series - NA				
N8700DESP Series - NA				
N8700-D-ESP-E Export Series - NA				
N8700N Series - NA				
N8700-R Series - NA				
N8800 Series - NA				
N8800-E Export Series				

Drain Connections

⚠ Warning

If a refrigerated base does not have a condensate evaporator supplied, you must connect the condensate line to a suitable drain. Otherwise, water will collect on the floor, causing a potentially hazardous situation.

⚠ Warning

Moisture collecting from improper drainage can create a slippery surface on the floor and a hazard to employees. It is the owner's responsibility to provide a container or outlet for drainage.

Cold wells, hot/cold wells, frost tops and cold slabs have a drain. The units drain must have an outlet to an appropriate drainage area or container. A drain trap must be installed.

- The 1" diameter drain on 8100-EF(N), N8000, N8000N, N8000-R, N8100B, N8100-BR, N8100-FA, N8100NB, and N8600 series units is shipped loose and must be connected during installation.
- N8157-FA, N8169-FA and N8182-FA have two drains.

  NOTE: There may be polyethylene insulation in the drain hole. This can easily be cut out without any contact or damage to the units interior insulation or refrigeration lines.
- N8200 and N8200-ST series have a 1/2" drain.
- N8200G series have a 3/4" drain located on end/center.
- All N8700 series are equipped with 1/2" (1.3cm) female NPT drains, one per well located right rear corner, manifold and 1/2" (1.3cm) gate valve.
- N8800 wells are sloped to a 1.00" (2.5cm) male NPT stainless steel drain.

Optional Auto Fill Installation

APPLICABLE TO N8600 & N8800 MODELS

1. Locate mounting holes on outside operator drop-in body and mount float and bracket using thumb screws.
2. Install drain plumbing as shown.
3. Connect clear plastic tubing to 1/2" copper stub and connect to the float. Use hose clamps to secure.
4. Connect fill line to 1/4" compression fitting.
5. Loosen thumb screws to achieve desired water level.

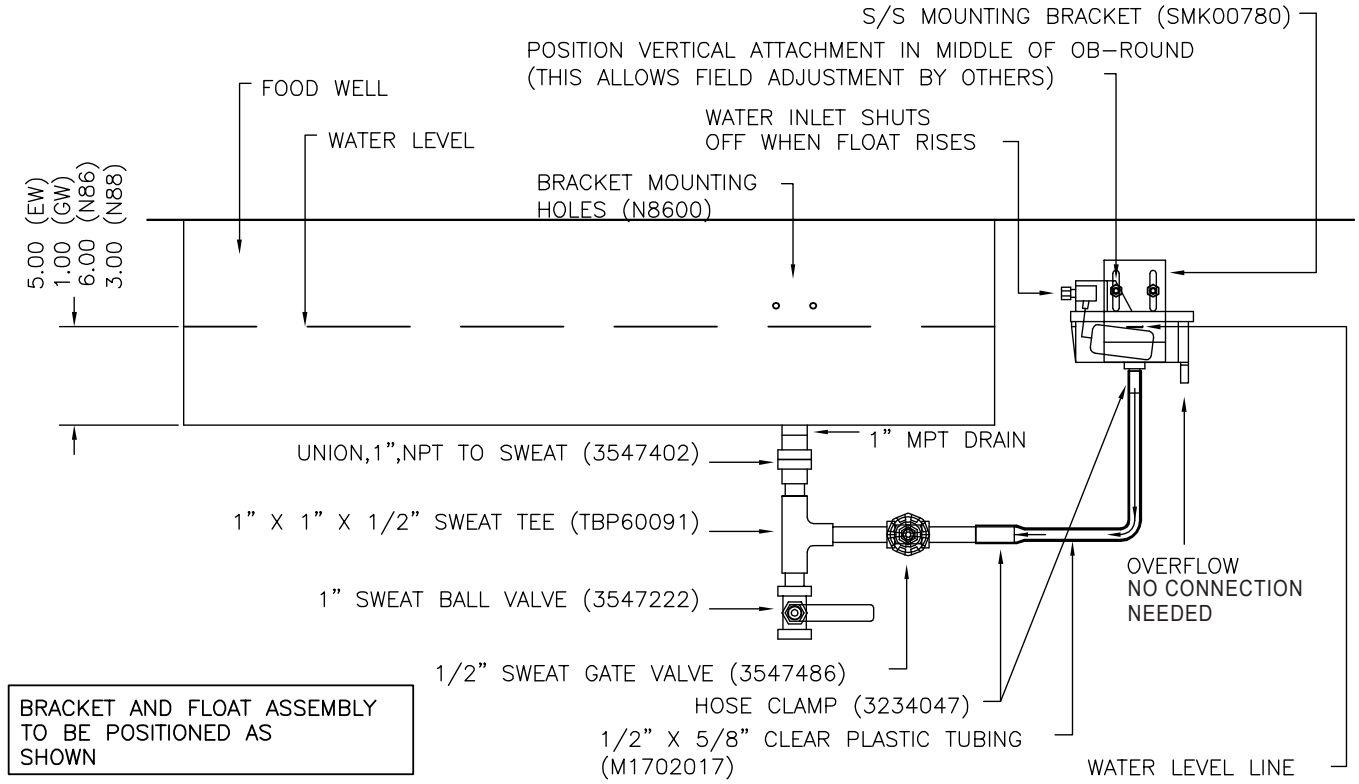

APPLICABLE TO N8700 MODELS

1. Locate mounting holes on outside operator drop-in body and mount float and bracket using thumb screws.
2. Install drain plumbing as shown.
3. Connect clear plastic tubing to 1/2" copper stub and connect to the float. Use hose clamps to secure.
4. Connect fill line to 1/4" compression fitting.
5. Loosen thumb screws to achieve desired water level.

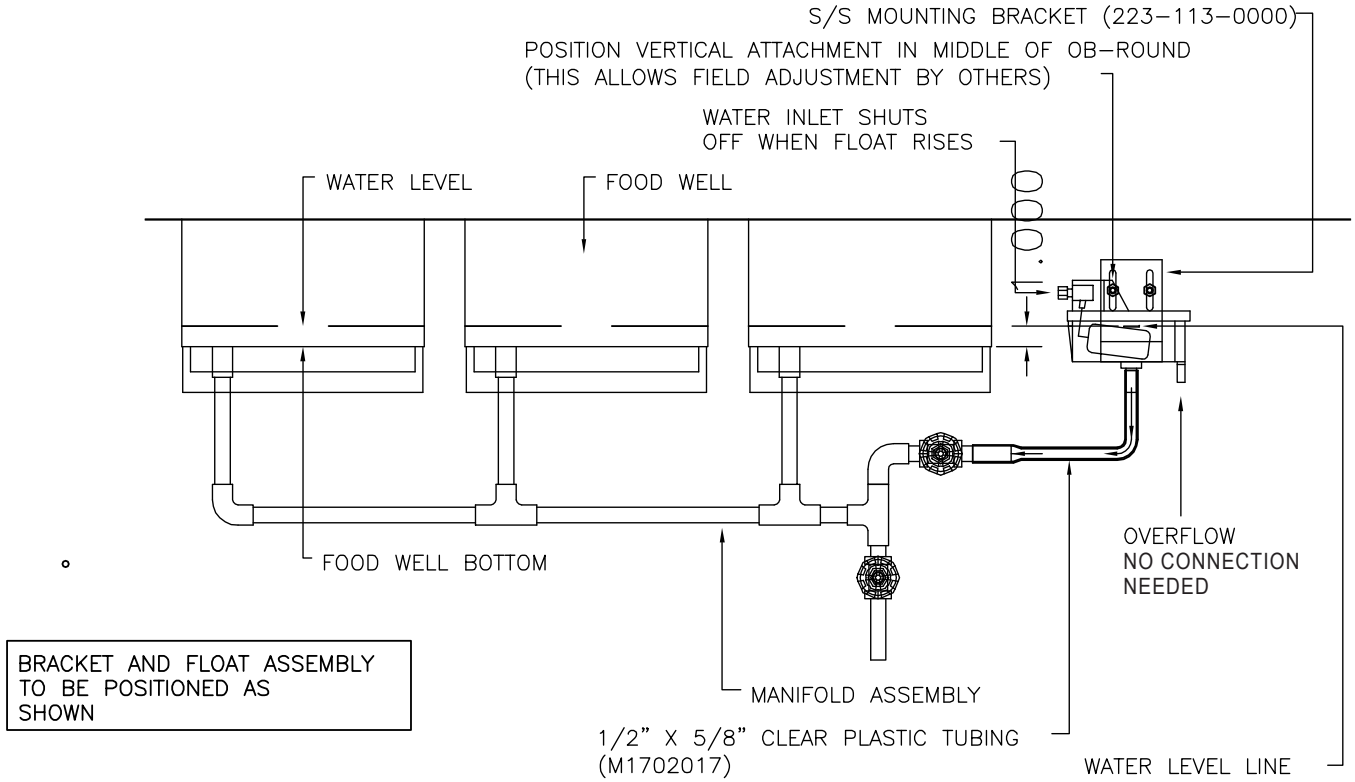

Section 3
Operation

⚠ DANGER

The on-site supervisor is responsible for ensuring that operators are made aware of the inherent dangers of operating this equipment.

⚠ DANGER

Do not operate any appliance with a damaged cord or plug. All repairs must be performed by a qualified service company.

⚠ DANGER

Never stand on the unit! They are not designed to hold the weight of an adult, and may collapse or tip if misused in this manner.

⚠ Warning

Do not contact moving parts.

⚠ Warning

All covers and access panels must be in place and properly secured, before operating this equipment.

⚠ Warning

Damp or wet hands may stick to cold surfaces.

⚠ Warning

Never use sharp objects or tools to remove ice or frost. Do not use mechanical devices or other means to accelerate the defrosting process.

⚠ Caution

Do not block the supply and return air grills or the air space around the air grills. Keep plastic wrappings, paper, labels, etc. from being airborne and lodging in the grills. Failure to keep the air grills clear will result in unsatisfactory operation of the system.

⚠ Caution

Units with pans should be operated with pans in place. Operating the unit without all pans in place will lower efficiency and may damage the unit.

Product Quality in Cold Pans

⚠ Warning

The operator of this equipment is solely responsible for ensuring safe holding temperature levels for all food items. Failure to do so could result in unsafe food products for customers.

These units are not designed to cool warm food products. Items should be placed in the unit pre-cooled at least to the desired holding temperature, if not slightly colder. In some applications, a gradual warming of product may occur, particularly at the exposed top of the product. Stirring or rotation of the product is necessary to maintain overall temperature.

Warming of food product can occur very quickly outside of the unit. When loading or rotating product, avoid leaving food items in a non-refrigerated location for any length of time to prevent warming or spoilage. To ensure product quality product must be rotated every four hours.

8100-EF(N) Series Operation

Note

The cold pan is not intended to be used with ice.

There is a switch on the compressor housing front to turn the 8100-EF units on and off. The unit must be turned off when not in use or overnight for defrosting and cleaning.

8100-EF Series LiquiTec® Eutetic fluid cold pans are adjusted at the factory to provide proper operation without any further adjustments.

However, if it is necessary to adjust the temperature, the control is located in the machine compartment.

- Adjustments should be made gradually.
- Several small adjustments will be more effective than one large adjustment.
- It may take eight hours to realize the temperature change depending on the application and location of the unit.

To raise the temperature:

6. Turn the cut-in screw counter clockwise a quarter turn.
7. Allow the unit to run for minimum four to eight hours before attempting any further adjustments.

To lower the temperature:

1. Turn the cut-in screw clockwise a quarter turn.
2. Allow the unit to run for minimum four to eight hours before attempting any further adjustments.

Temperature Control Settings:

5°F (3°C) differential

10°F (-12°C) cut-in

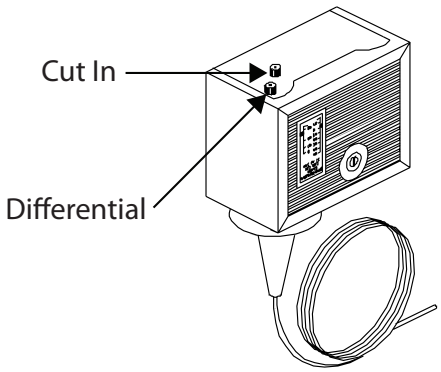

N8100B, N8100-BR & N8100NB Operation

The temperature control is used to turn the unit on and off as well as control the temperature of the cold pan. The control is located in the machine compartment. To turn the cold pan off, turn the knob to the off position. The unit must be turned off when not in use or overnight for defrosting and cleaning.

If the cold pan is to be used with ice, it is recommended that the optional perforated bottoms be used. These will allow ice to melt properly.

These mechanically cooled cold pans are adjusted at the factory to provide proper operation. However, if it is necessary to adjust the temperature, turn the knob clockwise as indicated on the control. Settings are from 1 thru 7 (7 being the coldest).

- Adjustments should be made gradually.
- Several small adjustments will be more effective than one large adjustment.
- It may take an hour or longer to realize the temperature change depending on the application and location of the unit.

N8100-FA Operation

There is a switch on the compressor housing front to turn the N8100-FA units on and off. The unit must be turned off when not in use or overnight for defrosting and cleaning.

NOTE: Food in the N8100-FA pans should not be loaded in such a way as to interfere with the air curtain flowing over the cold pans.

Defrost Timer

The recommended defrost timer setting is every 2 hours for 15 minutes.

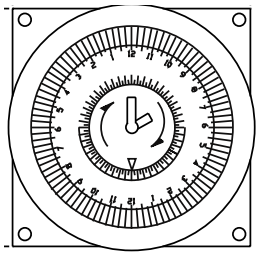

Pressure Control

The temperature is controlled by an adjustable pressure control located in the machine compartment and adjustable control has the word COLDER near the knob, with an arrow to indicate the adjustment direction. This control is field adjustable and does not require a service agent. If you have any questions, call an authorized service agent.

In attempting to adjust the pressure control, you can do damage to the unit by accidentally adjusting the differential.

NOTE: Delfield is not responsible for charges incurred while adjusting the pressure control.

Factory settings are:

- 30 psi (207 kPa) differential
- 80 psi (552 kPa) cut-in
- 50 psi (345 kPa) cut-out

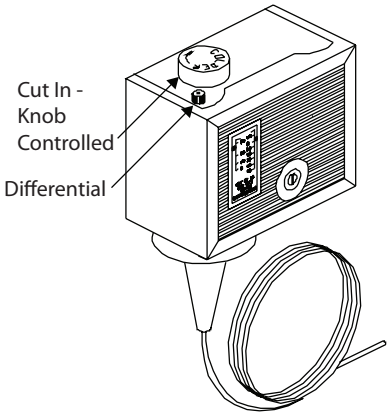

N8200 & N8200-ST Operation

N8200 and N8200-ST series frost tops are designed to maintain an even layer of frost to pleasantly display product. Once turned on, the compressor will run continuously. There is no temperature control. The ON/OFF switch is the only means available to cycle the unit.

Since it takes time for the frost to accumulate initially, the unit should be turned on approximately one hour before it is required. Product should not be placed on the frost top prior to turning the unit on, because it may freeze to the surface of the unit.

The unit must be turned off when not in use or overnight for defrosting and cleaning.

Operation N8200G

N8200G Series granite cold slabs are designed to maintain a low temperature surface for quick turn products such as ice cream. Frost patterns will vary depending on room conditions such as temperature, humidity and airflow. The work zone of the granite surface is considered to be inside a 2.0″ (5.1cm) perimeter. Temperatures in the perimeter zone may be higher and again the frost patterns in this area will vary based on room conditions.

Unit is controlled by an on/off switch. Once turned on, the unit will run continuously. There is no temperature control in this unit. Turn the unit on approximately two hours prior to use to allow for ample cool down time. At 75˚F ambient temperature the unit will reach operating temperature of 0˚F to 20˚F in 2 hours.

The unit must be turned off when not in use or overnight for defrosting and cleaning.

8600 Hot/Cold Series Operation

Hot Operation

⚠ DANGER

When operated at the highest temperature setting, the top of the unit will become very hot. Staff and customers using the equipment should be informed about this.

⚠ Caution

Never use anything other than plain water in the wells or tank. Failure to observe this warning may result in personal injury or damage to the unit.

⚠ Caution

Using ice in a hot food well can cause condensation and damage to the well over time.

N8600 Series hot and cold combination pans must be operated with water in the well for proper hot operation. Fill well with a minimum of 4.0" (10.2cm) of water. Place function switch in HOT position to begin heating. Turn thermostat dial to the desired temperature.

To turn unit off, simply move the function switch to OFF position. Drain water and allow unit to cool before cleaning or switching to cold operation.

Switching From Hot To Cold Operation

1. Place the function switch in the OFF position and drain out hot water.
2. Allow the unit to cool until it can be safely cleaned.
3. When clean up procedures are complete, unit will be ready for cold operation. This takes about one hour.

⚠ Caution

To assure maximum compressor life, do not switch from "hot" to "cold" operation without allowing a cool down period. Never switch from hot to cold operation while hot water remains in the pans. Failure to observe this warning will greatly reduce compressor life and eventually cause premature compressor failure.

Cold Operation

Simply place the function switch to the COLD position. The compressor controller has been factory set and no temperature adjustment should be necessary.

If the cold pan is to be used with ice, it is recommended that the optional perforated bottoms be used. These will allow ice to melt properly.

Switching From Cold To Hot Operation

No special procedure is required to switch from the cold to hot operation. Be certain to fill with a minimum of 4.0" of water.

Note

The unit is designed so that the compressor and the heating elements cannot operate at the same time. Continued operation of the compressor in the hot position is not normal. Call for service if this happens.

The unit must be turned off when not in use or overnight for defrosting and cleaning.

N8600 Immersion Heater High Limit

As a safety feature, the N8600 food well immersion heater includes a high limit safety switch. If the heater gets too hot the safety switch will trip and turn the heater off. A pilot light on the control panel will illuminate when the safety switch is tripped. To reset the safety switch, first turn OFF the thermostat or Power switch and then determine if low water is the cause. If low water is not the cause, contact service for resolution. If low water is the cause, carefully remove food pans and refill the water. This will allow the immersion heater to cool and the safety switch will automatically reset. The unit must be turned OFF as directed or safety switch will not reset even if water is refilled to proper level. Replace food pans and turn thermostat or Power switch back on.

N8700-D, N8700N, N8700-R & N8800 Series Operation

These units are designed to hold warm food product between 140ºF to 160ºF (60ºC to 71ºC).

N8700-D, N8700N and N8700-R series individually heated hot food units may be operated wet (with water in the wells) or dry. Wet operation is recommended for better performance.

N8800 Series single tank hot food units are designed to be operated wet (with water in the tank) only.

Note

Proper water level is approximately 2.0" (5.1cm). It must be maintained to prevent damage to the tank on the N8800 Series units.

After the unit is hard wired to the electrical system, select desired temperature by rotating temperature control. A knob and indicator light are provided for each individual heated food well.

First Time Use

Before the unit is used the first time for serving, turn the temperature knob to HI and heat the well for 20 to 30 minutes.

Any residue or dust that adhered to the heater element(s) will be burned off during this initial preheat period.

When serving thick sauces always use the hot food well in wet operation. This provides more uniform temperature for the sauce.

Note

Never place food directly in well. Always use pans.

For most efficient operation, keep covered inserts in each well during preheating or when empty.

Always place covers on pans when not serving to prevent food from drying out.

Wet Operation

⚠ DANGER

When operated at the highest temperature setting, the top of the unit will become very hot. Staff and customers using the equipment should be informed about this.

⚠ DANGER

Steam can cause serious burns. Always use some type of protective covering on your hands and arms when removing lids from the unit. Lift the lid in a way that will direct escaping steam away from your face and body.

⚠ Caution

Never use anything other than plain water in the wells or tank. Failure to observe this warning may result in personal injury or damage to the unit.

⚠ Caution

Using ice in a hot food well can cause condensation and damage to the well over time.

Fill the food well with a minimum of 2.0" (5.1cm) of water and cover with lid or empty pan. To preheat water, set temperature control at HI. With pans in place, wells will boil water. Food temperature will vary depending on type and amount of product. To minimize steam and water usage, set control at lowest setting that will maintain proper food temperature. To reduce preheating time, use hot water to fill the well.

Dry Operation N8700 Series only

⚠ DANGER

When operated dry, the well bottoms become very hot. Do not allow unprotected skin to contact any well surface.

Wet operation is usually much more efficient and is preferred. However, these units may be operated without water with no damage to the unit.

When operated dry, the bottom of the well will discolor. To clean, use a stainless steel cleaner or mild abrasive.

N8700-DESP Operation

These units are designed to hold warm food product between 140ºF to 160ºF (60ºC to 71ºC).

N8700-DESP series individually heated hot food units may be operated wet (with water in the wells) or dry. However, dry operation using 6.0" deep pans produces optimum performance.

A power switch and digital control are provided for each individual heated food well. After the unit is hard wired to the electrical system, turn the power switch ON to energize the control; the digital display will read OFF. Press Set and then use the arrows to select the desired temperature setting (1-10). The new temperature setting is entered 3 seconds after the last button is pressed. When the power switch is used to turn the well OFF and back ON the temperature setting will remain.

Note

Never place food directly in well. Always use pans.

For most efficient operation, keep covered inserts in each well during preheating or when empty.

Always place covers on pans when not serving to prevent food from drying out.

Dry Operation

⚠ DANGER

When operated dry, the well bottoms become very hot. Do not allow unprotected skin to contact any well surface.

Dry operation is more efficient and is preferred.

When operated dry, the bottom of the well will discolor. To clean, use a stainless steel cleaner or mild abrasive.

Wet Operation

⚠ DANGER

When operated at the highest temperature setting, the top of the unit will become very hot. Staff and customers using the equipment should be informed about this.

⚠ DANGER

Steam can cause serious burns. Always use some type of protective covering on your hands and arms when removing lids from the unit. Lift the lid in a way that will direct escaping steam away from your face and body.

⚠ Caution

Never use anything other than plain water in the wells or tank. Failure to observe this warning may result in personal injury or damage to the unit.

⚠ Caution

Using ice in a hot food well can cause condensation and damage to the well over time.

Fill the food well with a minimum of 2" (5cm) of water and cover with lid or empty pan. To preheat water, set temperature control at 3. With pans in place, wells will boil water. Food temperature will vary depending on type and amount of product. To minimize steam and water usage, set control at lowest setting that will maintain proper food temperature. To reduce preheating time, use hot water to fill the well. Preheating time with room temperature water is one hour.

N8700-DESP Temperature Control Operation

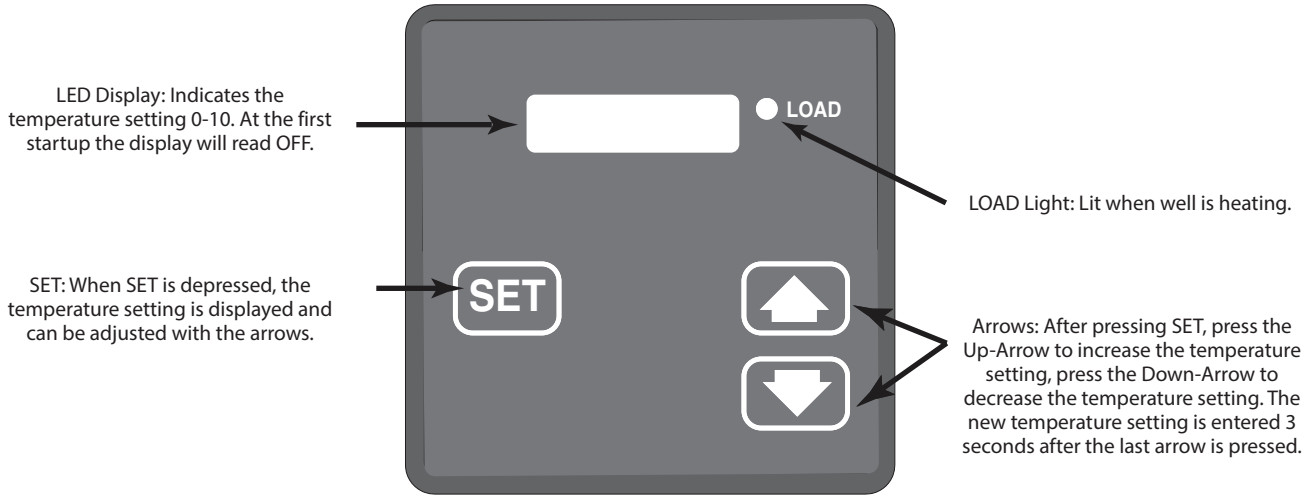

Section 4
Maintenance

⚠ DANGER

It is the responsibility of the equipment owner to perform a personal protective equipment hazard assessment to ensure adequate protection during maintenance procedures.

⚠ DANGER

Failure to disconnect the power at the main power supply disconnect could result in serious injury or death. The power switch DOES NOT disconnect all incoming power.

⚠ DANGER

Disconnect electric power at the main power disconnect for all equipment being serviced. Observe correct polarity of incoming line voltage. Incorrect polarity can lead to erratic operation.

⚠ Warning

Never use sharp objects or tools to remove ice or frost. Do not use mechanical devices or other means to accelerate the defrosting process.

Cleaning and Sanitizing Procedures

⚠ Caution

Maintenance and servicing work other than cleaning as described in this manual must be done by an authorized service personnel.

GENERAL

⚠ Warning

When using cleaning fluids or chemicals, rubber gloves and eye protection (and/or face shield) must be worn.

You are responsible for maintaining the equipment in accordance with the instructions in this manual. Maintenance procedures are not covered by the warranty.

Maintenance	Daily	Weekly	Monthly	After Prolonged Shutdown	At Start-Up
Exterior	X			X	X
Gasket	X			X	X
N8100-FA Series Drain		X		X	X
Condenser Coil			X	X	X

EXTERIOR CLEANING

⚠Warning

When cleaning the unit, care should be taken to avoid the front power switch and the rear power cord. Keep water and/or cleaning solutions away from these parts.

⚠Warning

Never use a high-pressure water jet for cleaning or hose down or flood the units with water. Do not use power cleaning equipment, steel wool, scrapers or wire brushes on stainless steel or painted surfaces.

⚠Caution

Never use an acid based cleaning solution! Many food products have an acidic content, which can deteriorate the finish. Be sure to clean the stainless steel surfaces of ALL food products.

Clean the area around the unit as often as necessary to maintain cleanliness and efficient operation.

Gaskets require daily cleaning to prevent mold and mildew build up and also to retain the elasticity of the gasket. Gasket cleaning can be done with the use of warm soapy water. Avoid full strength cleaning products on gaskets as this can cause them to become brittle and crack. Never use sharp tools or knives to scrape or clean the gasket.

Wipe surfaces with a damp cloth rinsed in water to remove dust and dirt from the unit. Always rub with the "grain" of the stainless steel to avoid marring the finish. If a greasy residue persists, use a damp cloth rinsed in a mild dish soap and water solution. Wipe dry with a clean, soft cloth.

Never use steel wool or abrasive pads for cleaning. Never use chlorinated, citrus based or abrasive cleaners.

Stainless steel has a clear coating that is stain resistant and easy to clean. Products containing abrasives will damage the coating and scratch the panels. Daily cleaning may be followed by an application of stainless steel cleaner which will eliminate water spotting and fingerprints. Early signs of stainless steel breakdown are small pits and cracks. If this has begun, clean thoroughly and start to apply stainless steel cleaners in attempt to restore the steel.

Defrosting

Refrigerated cold pans should be defrosted daily. Never use sharp objects or tools to clean or scrape ice/frost build up from the refrigerated cold pans. A puncture to the pan could cause irreparable damage to the refrigeration system. Units with a Eutectic Fluid Cold Pan require the same precautions. The fluid is NOT refillable and loss of fluid due to a puncture would cause irreparable damage.

CLEANING THE CONDENSER COIL

In order to maintain proper refrigeration performance, the condenser fins must be cleaned of dust, dirt and grease regularly. It is recommended that this be done monthly. If conditions are such that the condenser is totally blocked in a month, the frequency of cleaning should be increased. Clean the condenser with a vacuum cleaner or stiff brush. If extremely dirty, a commercially available condenser cleaner may be required.

Failure to maintain a clean condenser coil can initially cause high temperatures and excessive run times. Continuous operation with a dirty or clogged condenser coil can result in compressor failure. Neglecting the condenser coil cleaning procedures will void any warranties associated with the compressor and cost to replace the compressor.

N8100-FA SERIES DRAIN MAINTENANCE

Each N8100-FA unit has a drain located inside the unit that removes the condensation from the evaporator coil and routes it to an external condensate evaporator pan. Each drain can become loose or disconnected during normal use. If you notice water accumulation under the unit, be sure the drain tube is connected to the evaporator drain pan and the end of the drain tube is in the condensate evaporator. The leveling of the unit is important as the units are designed to drain properly when level. Be sure all drain lines are free of obstructions.

DELFIELD
980 SOUTH ISABELLA ROAD, MOUNT PLEASANT, MI 48858

800-733-8821
WWW.DELFIELD.COM

Every new piece of Manitowoc Foodservice equipment comes with KitchenCare™ and you choose the level of service that meets your operational needs from one restaurant to multiple locations.

StarCare – Warranty & lifetime service, certified OEM parts, global parts inventory, performance audited
ExtraCare — CareCode, 24/7 Support, online/mobile product information
LifeCare – Install & equipment orientation, planned maintenance, KitchenConnect™, MenuConnect
Talk with KitchenCare™ • 1-844-724-CARE • www.mtwkitchencare.com

Manitowoc KitchenCare™

To learn how Manitowoc Foodservice and its leading brands can equip you, visit our global web site at www.manitowocfoodservice.com, then discover the regional or local resources available to you.

Manitowoc Foodservice

©2016 Manitowoc Foodservice except where explicitly stated otherwise. All rights reserved. Continuing product improvement may necessitate change of specifications without notice.

Part Number: 9291458 10/16