ALTO-SHAAM

Operator's Manual

Heated Holding

Drawer Warmers

500-1D
500-2D
500-3D
500-2DI
500-1DN
500-2DN
500-3DN

MN-46969-EN

REV.01
5/20

EN

Manufacturer’s Information

Copyright

© Copyright 5/20 by Alto-Shaam, Inc.

All rights reserved.

This manual or any portion thereof may not be reproduced or used in any manner whatsoever without the express written permission of Alto-Shaam, Inc.

Trademarks

All trademarks referenced in this documentation are the property of their respective owners.

Manufacturer

Alto-Shaam, Inc.

P.O. Box 450

W164 N9221 Water Street

Menomonee Falls, WI 53052

Original instructions

The content in this manual is written in American English.

Enjoy your Alto-Shaam® Drawer Warmer!

Halo Heat® Technology

Soft, gentle Halo Heat® – Alto-Shaam Drawer Warmers use the same soft, gentle Halo Heat that made the Alto-Shaam Cook & Hold oven a kitchen staple all over the world. Product moisture is retained without adding water. With no exposed Calrod heating elements, cleaning is easy.

Alto-Shaam Drawer Warmers are available in one-, two- or three-drawer configurations and can fit anywhere you need production items held hot and within reach.

Extend Your Manufacturer's Warranty

Register

Register your Alto-Shaam appliance online. Registering your appliance ensures prompt service in the event of a warranty claim. You will also receive direct notifications of software updates and additional product information.

Your personal information will not be shared with any other company.

www.alto-shaam.com/warranty

Alto-Shaam 24/7 Emergency Repair Service

Call

Call 800-558-8744 to reach our 24-hour emergency service call center for immediate access to local authorized service agencies outside standard business hours. The emergency service access is provided exclusively for Alto-Shaam equipment and is available throughout the United States through Alto-Shaam's toll free number.

Availability

Emergency service access is available seven days a week, including holidays.

This page intentionally left blank.

Manufacturer's Information 2

Foreword **3**
Enjoy your Alto-Shaam® Drawer Warmer! 3
Extend Your Manufacturer's Warranty 3
Alto-Shaam 24/7 Emergency Repair Service 3

Table of Contents **5**

Safety **7**
The Meaning of Signal Words 7
Appliance Description and Intended Use. 8
Safety Precautions. 9

Labels **12**
Label Locations 12

Dimensions **15**
Dimension Drawings 15

installation **17**
How to Receive the Appliance 17
How to Unpack the Appliance 18
How to Install the Drawer Warmer 19

Operation **25**
Control Identification 25
How to Hold Hot Food 26
How to Display the Set or Actual Temperature 27
How to Change the Temperature Scale. 28
How to Calibrate the Temperature Sensor 29
How to Modify Drawer to Hold Oversized Pans 32

Maintenance **33**
Maintenance Schedule 33
How to Clean the Drawer Warmer 34

Troubleshooting **35**
Error Codes. 35

Warranty **37**
Warranty 37

This page intentionally left blank.

The Meaning of Signal Words

This manual contains signal words where needed. These signal words must be obeyed to reduce the risk of death, personal injury, or equipment damage. The meaning of these signal words is explained below.

DANGER

Danger indicates a hazardous situation which, if not avoided, will result in serious injury or death.

WARNING

Warning indicates a hazardous situation which, if not avoided, could result in serious injury or death.

CAUTION

Caution indicates a hazardous situation which, if not avoided, could result in minor or moderate injury.

NOTICE Notice indicates a situation which, if not avoided, could result in property damage.

NOTE: Note indicates additional information that is important to a concept or procedure.

Appliance Description and Intended Use

Halo Heat® Technology	The Alto-Shaam drawer warmer is an appliance that uses Halo Heat technology to keep hot foods hot. This gentle, radiant heat evenly surrounds food without the use of extremely hot elements, added humidity or fans.
Configurations	The drawer warmer series is available in three configurations: one-, two-, and three-drawer. The 500-2DI features two (2) individually controlled drawers.
Intended use	Drawer warmers are intended to keep hot food hot only. Any other use is prohibited.
Residual risks	This drawer warmer is manufactured using ISO-certified processes. The drawer warmer is designed with maximum safety in mind; however, there are residual risks to operators of this drawer warmer. Residual risks include exposure to heat and exposure to hot food products.
Possible misuse	Misuse of this drawer warmer includes loading the oven with anything other than a food product, or loading the drawer warmer with food that has not been heated to 140°F (60°C) to 160°F (71°C). Misuse also includes heating any food product that contains alcohol or other flammable substance.

Safety Precautions

Before you begin

Read and understand all instructions in this manual.

Electrical precautions

Obey these electrical precautions when using the appliance:

- Connect the appliance to a properly grounded outlet. Do not use the appliance if it is not properly grounded. Consult an electrician if there is any doubt that the outlet used is properly grounded.
- Keep the cord away from hot surfaces.
- Do not attempt to service the appliance or its cord and plug.
- Do not operate the appliance if it has a damaged cord or plug.
- Do not immerse the cord or plug in water.
- Do not let the cord hang over the edge of a table or counter.
- Do not use an extension cord.

Usage precautions

Obey these usage precautions when using the appliance:

- Only use this appliance for its intended use of heating or cooking.
- Use utensils and protective clothing such as dry oven mitts when loading and unloading the appliance.
- Use caution when using the appliance. Floors adjacent to the appliance may become slippery.
- Do not cover or block any of the openings of this appliance.
- Do not use this appliance near water such as a sink, in a wet location, near a swimming pool, or similar locations.

Maintenance precautions

Obey these maintenance precautions when maintaining the appliance:

- Obey precautions in the manual, on tags, and on labels attached to or shipped with the appliance.
- Only clean the appliance when it is disconnected from the power source.
- Do not store the appliance outdoors.
- Do not clean the appliance with metal scouring pads.
- Do not use corrosive chemicals when cleaning the appliance.
- Do not use a hose or water jet to clean the appliance.
- Do not use the appliance cavity for storage.
- Do not leave flammable materials, cooking utensils, or food inside the appliance when it is not in use.

Continued on next page

Continued from previous page

Operator training

All personnel using the appliance must have proper operator training. Before using the appliance:

- Read and understand the operating instructions contained in all the documentation delivered with the appliance.
- Know the location and proper use of all controls.
- Keep this manual and all supplied instructions, diagrams, schematics, parts lists, notices, and labels with the appliance if the appliance is sold or moved to another location.
- Contact Alto-Shaam for additional training if needed.

Operator qualifications

Only trained personnel with the following operator qualifications are permitted to use the appliance:

- Have received proper instruction on how to use the appliance.
- Have demonstrated their ability with commercial kitchens and commercial appliances.

The appliance must not be used by:

- Persons (including children) with reduced physical, sensory or mental capabilities, or lack of experience and knowledge, unless they have been given supervision concerning use of the appliance by person responsible for their safety.
- People impaired by drugs or alcohol.

- Children should be supervised to ensure that they do not play with the appliance.
- Children shall neither clean nor maintain the appliance.

Condition of appliance

Only use the appliance when:

- All controls operate correctly.
- The appliance is installed correctly.
- The appliance is clean.
- The appliance labels are legible.

Servicing the appliance

- Only trained personnel are permitted to service or repair the appliance. Repairs that are not performed by an authorized service partner or trained technician will void the warranty and relieve Alto-Shaam of all liability. Original manufacturer's replacement parts may be substituted; however, these parts must be of equal quality and specifications as those provided by Alto-Shaam.
- To prevent serious injury, death or property damage, have the appliance inspected and serviced at least every twelve (12) months by an authorized service partner or trained technician.
- Contact Alto-Shaam for the authorized service partner in your area.

Continued on next page

Continued from previous page

Personal Protective Equipment (PPE)

Wear the following Personal Protective Equipment (PPE) while cleaning the appliance:

- Protective gloves
- Protective clothing
- Eye protection
- Face protection

Label Locations

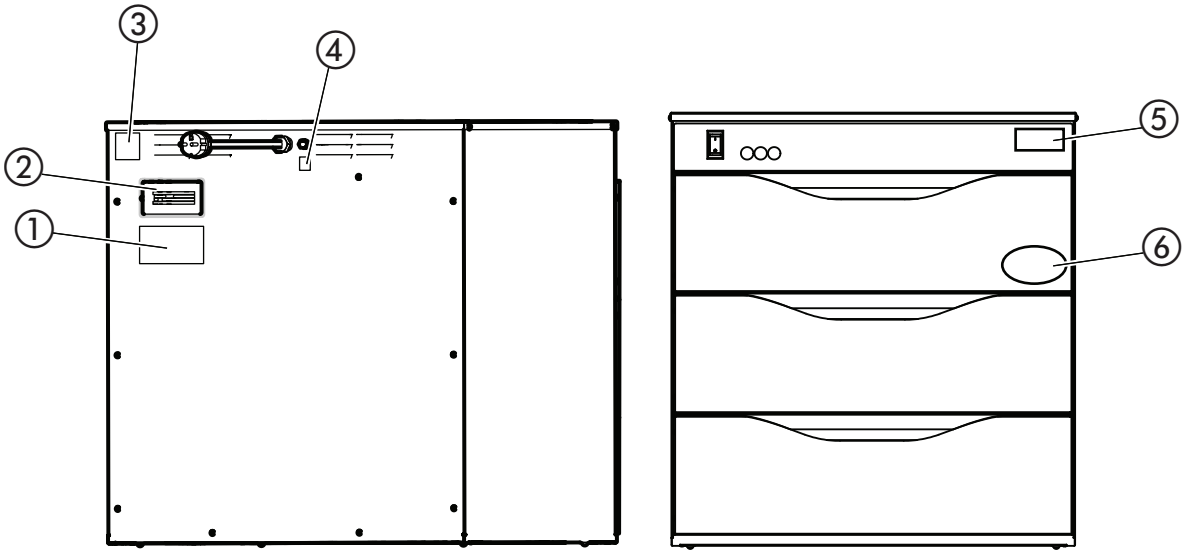

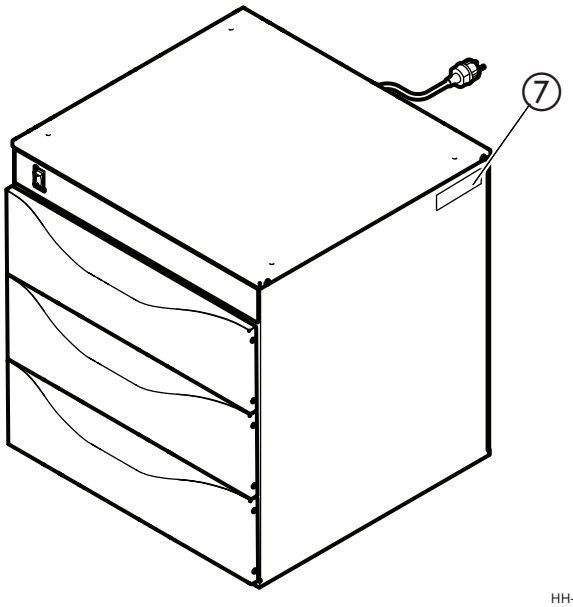

HH-REF-009706

1		Every Alto-Shaam® product is precision calibrated prior to release from the factory to ensure accurate temperature control.
2	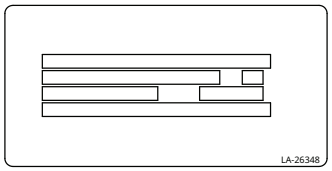	Rating Tag
3		Do not dispose of this item in general waste. (230V only)
4		Equipotential bonding
5		Made in U.S.A.
6		Halo Heat LA-2304
7		Security seal

This page intentionally left blank.

Dimension Drawings

500-1D, 500-2D, 500-3D

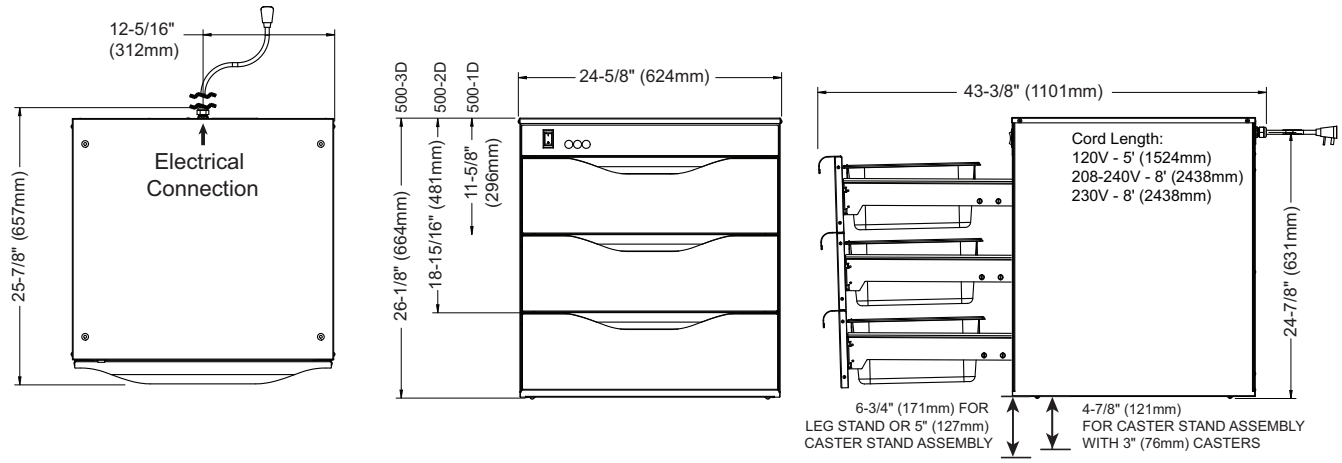

500-1DN, 500-2DN, 500-3DN

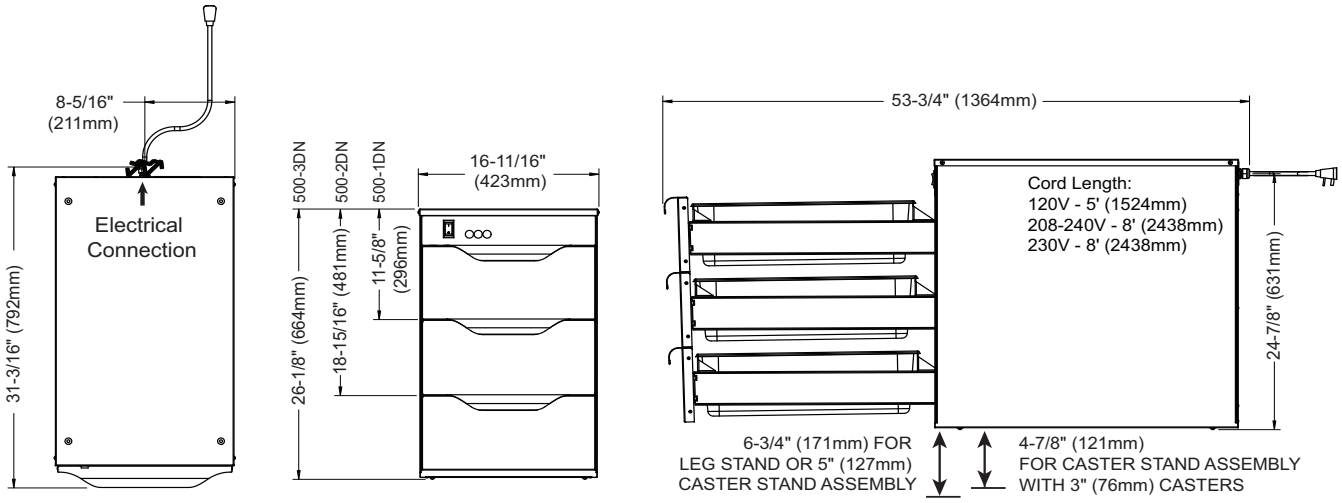

Continued on next page

Continued from previous page

500-2DI

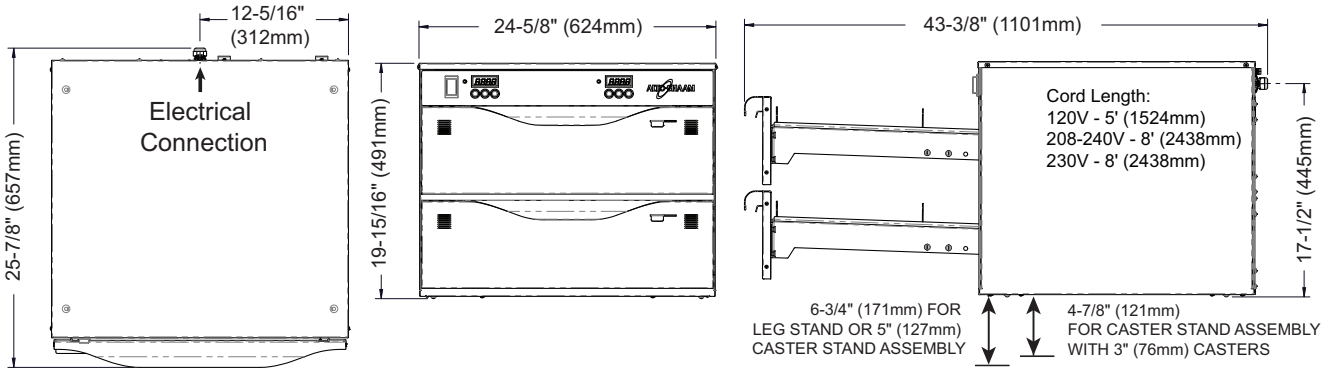

Cutout Dimensions (for drawer warmers with built-in trim)

Add 3/4" (19mm) to drawer warmer height, and 1-1/2" (38mm) to drawer warmer width.

How to Receive the Appliance

Responsible parties

When an Alto-Shaam® preferred carrier is used, shipping damage is a matter between Alto-Shaam and the carrier. In such cases, contact Alto-Shaam customer service.

When an Alto-Shaam non-preferred carrier is used, shipping damage is a matter between the carrier and the consignee. In such cases, the carrier is assumed to be responsible for the safe delivery of the merchandise, unless negligence can be established on part of the shipper.

Receive the appliance

When receiving the appliance, do the following.

Step	Action
1.	**Inspect** the equipment while it is still in the truck or immediately after it is moved to the receiving area. Do not wait until after the equipment is moved to a storage area.
2.	**Inspect and count** all merchandise received. Do not sign a delivery receipt or a freight bill until you have done so.
3.	**Note** all damage to packaging and to the equipment on the carrier's receipt.
4.	**Request** the driver sign the delivery receipt. If the driver refuses to sign, make a note of this refusal on the delivery receipt.
5.	**Write** the following on the delivery receipt if the driver refuses to allow an inspection: Driver refuses to allow inspection of containers for visible damage.
6.	**Contact** the carrier immediately upon finding damage, and request an inspection. **Follow** the carrier's policies and procedures.

Alto-Shaam policy

It is the policy of Alto-Shaam to assist customers in collecting claims that have been properly filed and actively pursued. Alto-Shaam cannot, however, file damage claims, assume the responsibilities for damage claims, or accept deductions in payment for damage claims.

How to Unpack the Appliance

Before you begin

Make sure you have:

- An appropriate lifting device and enough personnel to safely move and position the weight of the appliance.
  - 500-1D: 80 lbs (36 kg)
  - 500-2D, 500-2DI: 115 lbs (52 kg)
  - 500-3D: 150 lbs (68 kg)
  - 500-1DN: 67 lbs (30 kg)
  - 500-2DN: 100 lbs (45 kg)
  - 500-3DN: 130 lbs (59 kg)
- Cutting tools to remove the packaging.

Unpack the appliance

To unpack the appliance, do the following.

Step	Action
1.	**Remove** the box. **Save** all packing materials for inspection by the carrier. **NOTE:** Examine the appliance for damage. If the appliance has been damaged, do not use the appliance until it has been inspected by an authorized service provider. Contact your carrier or Alto-Shaam® customer service.
2.	**Remove** the shrink wrap.
3.	**Cut** the restraining straps.
4.	**Remove** the appliance from the pallet.

Result

The appliance is now unpacked.

How to Install the Drawer Warmer

Before you begin

Make sure you have:

- An appropriate lifting device, and enough personnel, to safely move and position the weight of the drawer warmer.

Requirements

- The drawer warmer must be installed on a level surface.
- The drawer warmer must not be installed in any area where it may be affected by steam, grease, dripping water, high temperature, or any other severely adverse conditions.

Electrical Specifications

500-D 500-DN	V	Ph	Hz	Awg	IEC	A	Breaker (A)	kW	Plug Configuration	Certification
120V	120	1	50/60	14	—	5.3	15	.64	NEMA 5-15P 20A-125V plug	
208-240V	208	1	50/60	14	—	2.7	15	.64	NEMA 6-15P 20A-125V plug	
	240	1	50/60	14	—	2.7	15	.64		
230V	230	1	50/60	1.5mm^2	—	2.6	16	.59	CEE 7/7 | BS-1363 | CH2-16P Plugs rated 250V	IP X4

Electrical connections must meet all applicable federal, state, and local codes.

CEE 7/7 BS-1363 CH2-16P AS/NZS 3112

500-2DI	V	Ph	Hz	Awg	IEC	A	Breaker (A)	kW	Plug Configuration	Certification
120V	120	1	60	14	—	10.7	15	1.28	NEMA 5-15P 20A-125V plug	
208-240V	208	1	60	14	—	5.3	15	9.6	NEMA 6-15P 20A-125V plug	
	240	1	60	14	—	5.3	15	1.28		
230V	230	1	50/60	1.5mm^2	—	5.1	16	1.18	CEE 7/7 | BS-1363 | CH2-16P Plugs rated 250V	IP X4

Electrical connections must meet all applicable federal, state, and local codes.

CEE 7/7 BS-1363 CH2-16P AS/NZS 3112

Continued on next page

Continued from previous page

Electrical connection

WARNING: Appliances without a cord provided by the factory must be equipped with a cord of sufficient length to permit the appliance to be moved for cleaning.

Always use the correct AWG wire size based on the electrical requirements for the appliance.

WARNING: To prevent serious injury, death, or property damage:

All electrical connections must be made by a qualified and trained service technician in accordance with applicable electrical codes.

This appliance must be adequately grounded in accordance with local electrical codes or, in the absence of local codes, with the current edition of the National Electrical Code ANSI/NFPA No 70. In Canada, all electrical connections are to be made in accordance with CSA C22 1, Canadian Electrical Code Part 1 or local codes.

CE-approved appliances include an equipotential-bonding terminal marked with the equipotential symbol. Provisions for earthing are to be made in accordance with IEC:2010 60335-1 section 27 or local codes.

CAUTION: Electrical shock hazard.

Power source must match voltage identified on appliance rating tag. The rating tag provides essential technical information required for any appliance installation, maintenance or repairs Do not remove, damage or modify the rating tag.

Continued on next page

Continued from previous page

Regarding international standard drawer warmers:

If the drawer warmer is not equipped with flexible cord and plug, an all-pole country approved disconnection device which has a contact separation of at least 3mm in all poles must be incorporated in the fixed wiring for disconnection. When using a cord without a plug, the green/yellow conductor shall be connected to the terminal which is marked with the ground symbol. If a plug is used, the socket outlet must be easily accessible. If the power cord needs replacement, use a similar one obtained from the distributor.

Hard wired drawer warmers:

Hard wired drawer warmers must be equipped with a country certified external all pole disconnection switch with sufficient contact separation. An oil resistant cord like H05RN or H07RN or equivalent must be used.

NOTICE Where local codes and CE regulatory requirements apply, appliances must be connected to an electrical circuit that is protected by an external GFCI outlet.

Continued on next page

Continued from previous page

Position the drawer warmer

To position the drawer warmer, do the following.

Step	Action
1.	**Make sure** that: ▪ The location where the drawer warmer is being installed is rated to support the weight of the drawer warmer; ▪ The drawer warmer is within five feet of the appropriate electrical outlet; ▪ You follow the drawer warmer clearance guidelines. 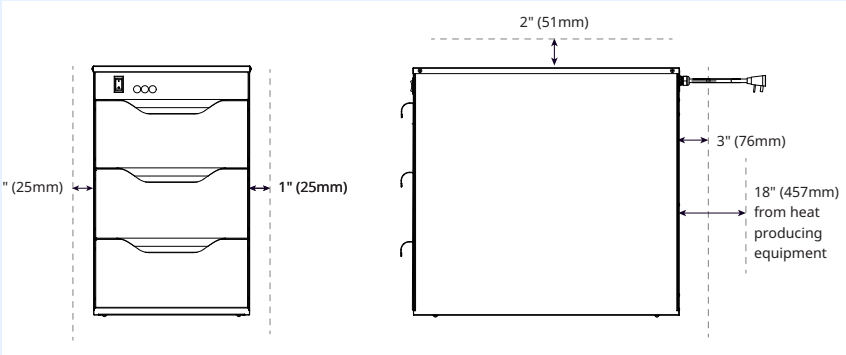
2.	**Move** the drawer warmer to the installation location and onto the final resting surface. The drawer warmer is now correctly positioned.
3.	See topic *How to Clean the Drawer Warmer* and thoroughly clean the drawer warmer.

Connect power

4.	To connect electric power to the drawer warmer, do the following. **Plug** the drawer warmer into a properly grounded receptacle only, positioning the drawer warmer so that the plug is easily accessible in case of an emergency. Arcing will occur when connecting or disconnecting the drawer warmer unless all controls are in the "OFF" position For hard-wired drawer warmers, set the disconnect switch to the ON position. 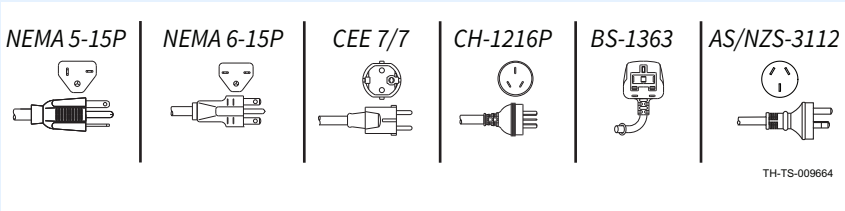

Continued on next page

Continued from previous page

5. When starting up the drawer warmer, an odor may be noticeable. If an oder is noticed, operate the drawer warmer without food for a minimum of two (2) hours at a temperature of 140°F (93°C) to remove surface oils (the total time required to remove surface oils may be longer).

Result

The drawer warmer is now installed.

This page intentionally left blank.

Control Identification

Control Functions

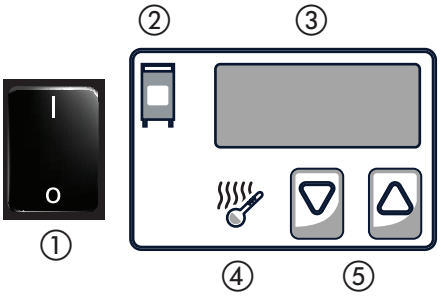

TH-TS-009666

Item	Description	Function
1	On/Off Power Switch	Press to turn on or turn off the drawer warmer
2	Heat Indicator Light	Indicates when the drawer warmer has reached the set temperature
3	LCD Display	Displays time, temperature, settings, and error codes
4	Temperature Display	Press to display the Set and Actual cavity temperature
5	Up/Down Arrows	Press to set warming time

How to Hold Hot Food

Before you begin

Make sure:

- The drawer warmer is turned on.
- Food to be put into the drawer warmer is 140°F (60°C) to 160°F (71°C).

Procedure

To hold hot food, do the following.

Step	Action
1.	**Set** the power switch ① to the ON position. 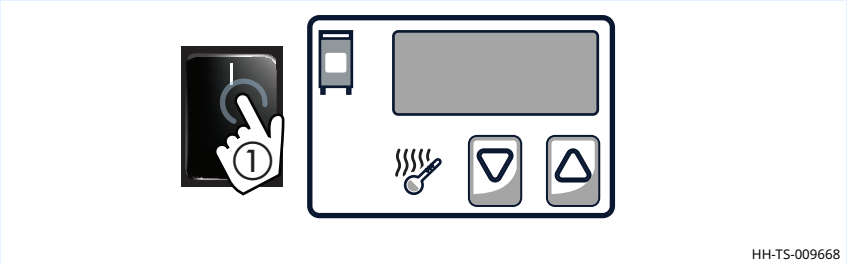
2.	**Press** the up or down arrow ② to 200°F (93°C). The heat indicator ③ will light. 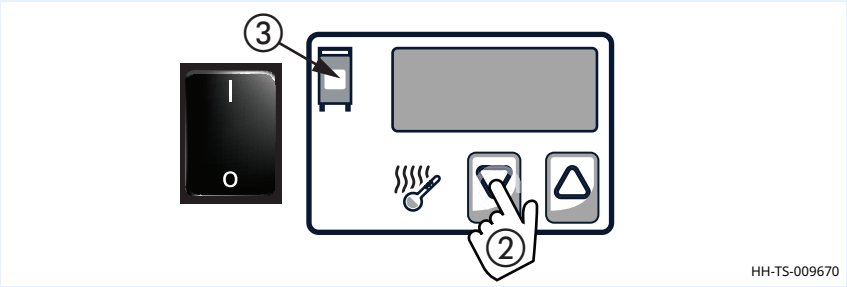
3.	Allow the drawer warmer to preheat for 30 minutes before adding hot food. When the heat indicator light turns off, the drawer warmer has reached the Set temperature.
4.	Load the drawer warmer with hot food only (140°F (60°C) to 160°F (71°C)).

Result

The drawer warmer is holding hot food.

How to Display the Set or Actual Temperature

Before you begin

Make sure:

- The drawer warmer is turned on.

Procedure

The factory default is set to display the Set temperature. To change the control to display the Actual temperature, do the following

Step	Action
1.	**Press** and hold the Temperature Display button ① and the up arrow ② for five (5) seconds. The control will display “ACT” and then the Actual temperature. 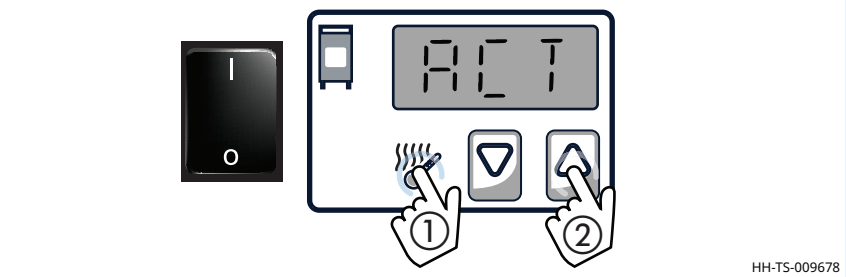
2.	To return to show the Set temperature, **press** and hold the Temperature Display button ③ and the up arrow ④ for five (5) seconds. The control will display “SET” and then the Set temperature. 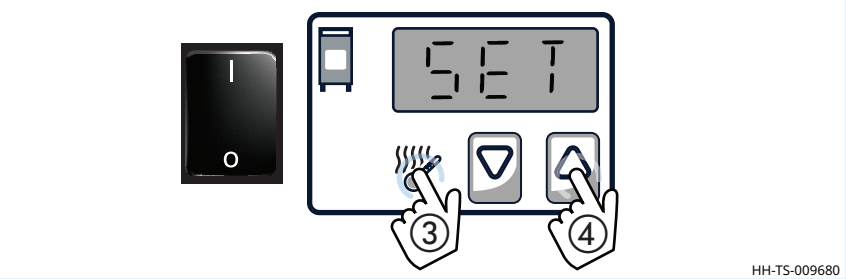 **Press** the Temperature Display button at any time to display the Set or Actual temperature.

Result

The control will display the Set or Actual temperature.

How to Change the Temperature Scale

Before you begin

Make sure:

- The drawer warmer is turned on.

Procedure

The factory default is set to display Fahrenheit (F°). To change the control to display Celsius (C°), do the following.

Step	Action
1.	**Press** and hold the Temperature Display button ① and the down arrow ② for 5 seconds. The control will display Celsius (C°). 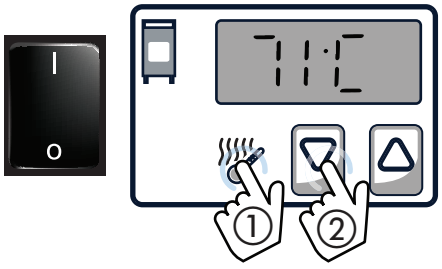 HH-TS-009682 After three (3) seconds the control will return to displaying the Set or Actual temperature.
2.	To return the default to show Fahrenheit, **press** and hold the Temperature Display button ③ and the down arrow ④ for five (5) seconds. The control will display Fahrenheit (F°). 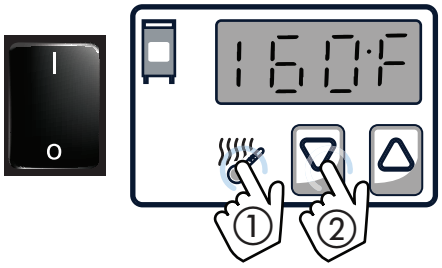 HH-TS-009684

Result

The control will display the Fahrenheit or Celsius temperature scale.

How to Calibrate the Temperature Sensor

Before you begin

- The oven must be connected to electrical power and on.
- Make sure you have a multimeter with a thermocouple attachment.
- Make sure you have read the topic *How to Display the Set and Actual Temperature.*

Procedure

To calibrate the temperature sensor, do the following.

Step	Action
1.	**Clean** the temperature sensor with a damp cloth. 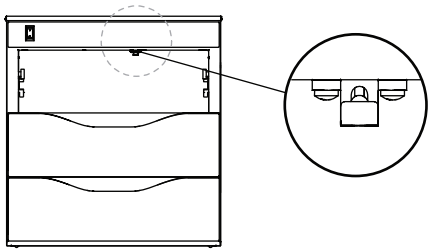 HH-TS-009867
2.	Suspend a multimeter thermocouple in the center of the drawer. Do not allow the thermocouple to touch any surface. Close the drawer, and do not open it until calibration is complete.
3.	**Press** the up or down arrows ① to set the temperature to 140°F (60°C). 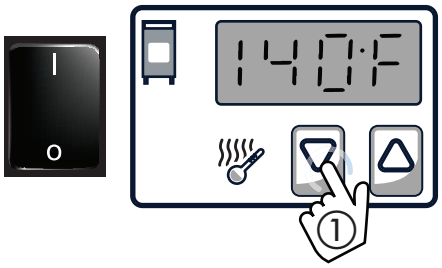 HH-TS-009686

Continued on next page

Continued from previous page

4. Allow the drawer warmer to heat for 60 minutes.

   Calibrate the offset number. Subtract the smaller value from the larger value. This is the offset. If the value measured by the multimeter was the larger value, the offset will positive “+”. If the value measured by the multimeter was the smaller value, the offset will be negative “–”.

5. If the multimeter temperature and the Actual temperature don’t match, **press** and **hold** the Up and down arrow buttons ② for eight (8) seconds. The control will display the previous calibration offset value or 0.

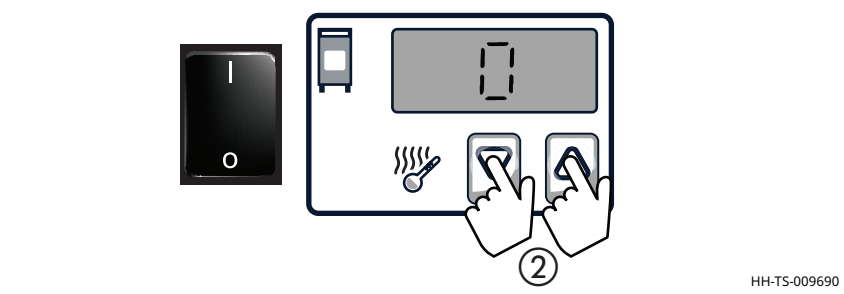

6. **Press** the Up or down arrows ③ to set the appropriate offset value.

   Example: If the multimeter temperature is 145°F, and the Actual temperature is 140°F, set the offset to +5 from the original offset to bring the Actual temperature to 145°F.

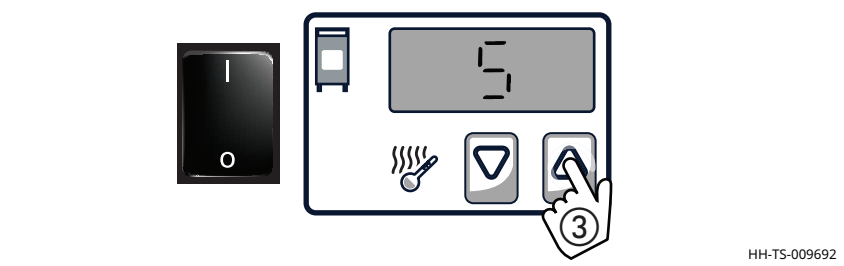

Continued on next page

Continued from previous page

7. **Press** the Temperature Display button ④ to save the offset and exit calibration mode.

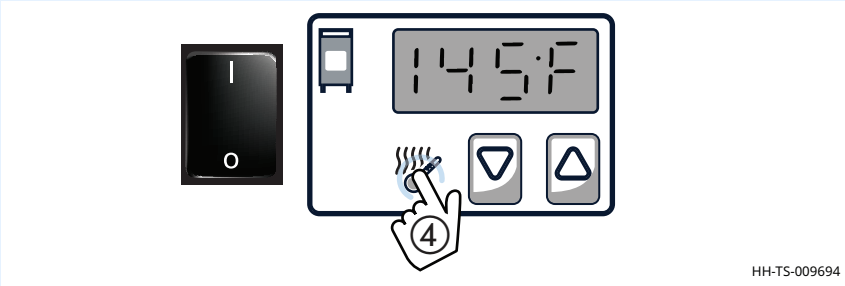

8. Allow the drawer warmer to re-stabilize and **compare** the temperature again.

   Tolerance at 140°F (60°C) is +/- 8°F (+/-4°C). Tolerance at 180°F (82°C) is +/- 10°F (+/- 6°C).

Result

The temperature sensor has been calibrated.

How to Modify Drawer to Hold Oversized Pans

Before you begin

- Turn the drawer warmer off and make sure it is cool.
- Make sure you have a flathead screwdriver.

Procedure

To modify the drawer to hold oversized pans, do the following.

Step	Action
1.	**Remove** the drawer from the drawer warmer.
2.	**Remove** the four (4) screws holding the pan support bracket. 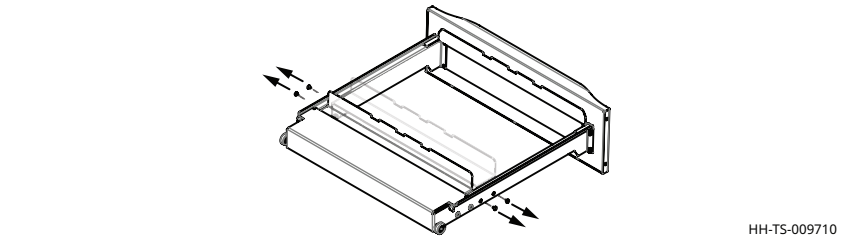
3.	**Slide** the bracket to the back two (2) holes. 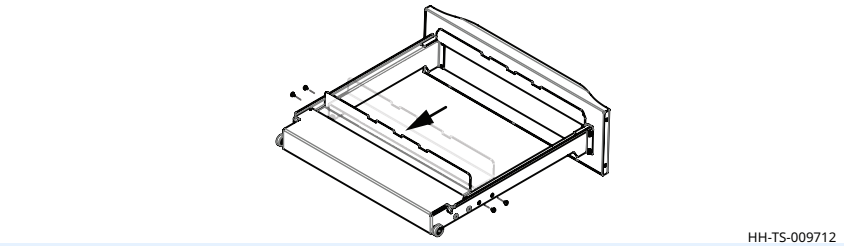
4.	**Re-install** the four (4) screws. 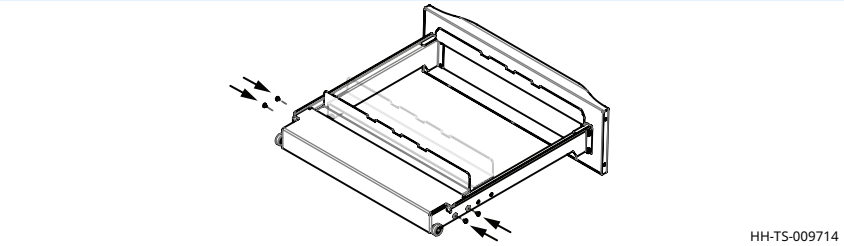
5.	**Re-install** the drawer into drawer warmer.
6.	**Insert** oversized pan into drawer.

Result

The drawer is now modified to hold oversized pans.

Maintenance Schedule

Requirements

- See topic *How to Clean the Drawer Warmer*.
- Disconnect the drawer warmer from power source and let cool.

Daily

For daily maintenance, do the following.

- **Remove** any spills with disposable paper wipes or a damp cloth.
- **Wipe** the outside of the drawer warmer with a damp cloth.
- **Check** the display screen for cracking or peeling. Contact Technical Service if needed.

Weekly

For weekly maintenance, do the following.

- **Clean** the entire drawer warmer. **Make sure** to use a non-abrasive nylon scrub pad.
- Do not spray the cleaner directly into the fan openings located in the rear of the drawer warmer.

Monthly

For monthly maintenance, do the following.

- **Inspect** drawers and drawer rails.
- **Inspect** drawer vent slides for proper operation (if applicable).
- **Calibrate** the temperature sensor.
- **Inspect** door handle screws and tighten if necessary.

Yearly

For yearly maintenance, do the following.

> **NOTE:** Must be performed by a qualified professional.

- **Check and tighten** all wire connections.
- **Measure** the current draw.
- **Test** the heating elements for electrical short to ground.
- **Inspect** the condition of the cord and plug.
- **Check and tighten** the cord connection inside of the appliance control area.
- **Measure** the site voltage.
- **Inspect and adjust** voltage monitor board if needed.
- **Inspect** and test the control and control functions.
- **Calibrate** the temperature sensor.

How to Clean the Drawer Warmer

Before you begin

WARNING: Electric shock hazard.

Set the power switch to the OFF position and unplug the appliance.

CAUTION: Burn hazard.

Allow the drawer warmer to cool before cleaning.

CAUTION: Corrosive materials hazard.

Wear eye protection and hand protection when cleaning.

NOTICE Using improper cleaning procedures will damage the appliance and void the warranty.

Do not use steel pads, wire brushes, or scrapers when cleaning.

Before first use

Thoroughly clean the drawer warmer before using.

Daily cleaning procedure

To clean the drawer warmer daily, do the following.

Step	Action
1.	**Make sure** the drawer warmer is disconnected from the power source and cool—drawer is less than 140°F (60°C).
2.	**Remove** drawer pans and wash separately.
3.	**Remove** the drawers and wipe with a damp cloth.
4.	**Remove** the drawer rails by lifting the rail off of the bottom pins and bolt, and then sliding it off of the top pin.
5.	**Wipe** the inside and outside of the drawer warmer with a damp cloth.
6.	**Wipe** the control panel, drawer vents, and drawer handles, and gaskets with a non-abrasive nylon scrub pad.
7.	**Wipe** the outside of the drawer warmer with a stainless steel cleaner.

Result

The drawer warmer is now clean.

Error Codes

Code	Description	Cause/Remedy
E-10	Cavity probe shorted	Cavity air sensor reading < 5°F (-15°C). Verify sensor integrity.
E-11	Cavity probe open	Cavity air sensor reading > 517°F (269°C). Verify sensor integrity.
E-20	Product probe is shorted (oven will cook in time only)	Product probe reading < 5°F (-15°C). Verify sensor integrity.
E-21	Product probe is open (oven will cook in time-mode only)	Product probe reading > 517°F (269°C). Verify sensor integrity.
E-30	Unit under temperature	Unit has been more than 25°F (14°C) below setpoint for longer than 90 minutes.
E-31	Unit over temperature	Unit has been more than 60°F (33°C) above the maximum setpoint for longer than 3 minutes. Holding Cabinets with this error code are more than 145°F (81°C) above the maximum setpoint.
E-32	Safety switch open (Aux hi-limit switch)	Contact factory.
E-38	Internal software error	Contact factory.
E-39	Sensor error	Contact factory.
E-50	Temp. measurement error	Contact factory.
E-51	Temp. measurement error	Contact factory.
E-60	Real time clock error	Data set to factory default. Ensure that date and time are correct if applicable.
E-61	Real time clock error	Contact factory.
E-64	Clock is not oscillating	Contact factory.
E-70	Configuration connector error (DIP switch)	Refer to the electrical schematic and ensure DIP switches on the control match the settings called out on the schematic. If the DIP switch settings are correct, according to the schematic, replace the control.
E-78	Voltage low	Voltage below 90 VAC on a 125 VAC unit, or below 190 VAC on a 208-240 VAC unit. Adjust DC voltage.
E-79	Voltage high	Voltage over 135 VAC on a 125 VAC unit, or over 250 VAC on a 208-240 VAC unit. Adjust DC voltage.
E-80	EEPROM RAM reset	Ensure that all temperatures and times are properly set. Contact factory if problem persists.
E-81	EEPROM error	Contact factory.
E-82	EEPROM error	Contact factory.
E-83	EEPROM not responding	Contact factory.
E-85	EEPROM error	All timers, if previously on, are now off. Possible bad EEPROM.
E-86	EEPROM error	Stored HACCP memory corrupted HACCP Address reset to 1. Possible bad EEPROM. Contact factory if problem persists

Code	Description	Cause/Remedy
E-87	EEPROM Error	Stored offsets corrupted Offsets reset to 0 Control may need a recalibration. Possible bad EEPROM. Contact factory if problem persists.
E-88	EEPROM Error	All timer setpoints are reset to 1 minute. Timers, if previously on, are now off. Possible bad EEPROM
E-90	Button stuck	A button has been held down for > 60 seconds. Adjust control Error will reset when the problem has been resolved
E-91	Input failure	Contact factory
E-dS	Datakey error	Datakey digital signature incompatible. Cycle power, and install compatible Datakey if error persists
E-dT	Datakey error	Datakey incompatible with control. Install compatible Datakey.
E-dU	Datakey unplugged	Install Datakey and cycle power to control to clear error.
dLto	Datalogger has timed out	Cycle power. Contact factory if error persists.
dLSD	Micro SD card not plugged in	Plug in SD card and cycle power. Contact factory if error persists.

Warranty

Introduction

Alto-Shaam, Inc. warrants to the original purchaser only, that any original part found to be defective in material or workmanship will be replaced with a new or rebuilt part at Alto-Shaam's option, subject to provisions hereinafter stated.

Warranty Period

The original parts warranty period is as follows:

- For all other original parts, one (1) year from the date of installation of appliance or fifteen (15) months from the shipping date, whichever occurs first.
- The labor warranty period is one (1) year from the date of installation or fifteen (15) months from the shipping date, whichever occurs first.
- Alto-Shaam will bear normal labor charges performed during standard business hours, excluding overtime, holiday rates or any additional fees.
- For the refrigeration compressor, if installed, the warranty period is five (5) years from the date of original installation of the appliance.
- For heating elements on Halo Heat® Cook and Hold ovens, the warranty period is for as long as the original owner owns the oven. This warranty period applies to units sold after 2/1/2009 and excludes holding-only ovens.
- To be valid, a warranty claim must be asserted during the applicable warranty period. This warranty is not transferable.

Exclusions

This warranty does not apply to:

- Calibration.
- Replacement of light bulbs, rubber gaskets, grease filters, air filters, racks, jet plates, and/or the replacement of glass due to damage of any kind.
- Equipment damage caused by accident, shipping, improper installation or alteration.
- Equipment used under conditions of abuse, misuse, carelessness or abnormal conditions, including but not limited to, equipment subjected to harsh or inappropriate chemicals, including but not limited to, compounds containing chloride or quaternary salts, poor water quality, or equipment with missing or altered serial numbers.
- Equipment damage caused by use of any cleaning agents other than those recommended by Alto-Shaam, including but not limited to damage due to chlorine or other harmful chemicals.
- Any losses or damage resulting from malfunction, including loss of food product, revenue, or consequential or incidental damages of any kind.
- Equipment modified in any manner from original model, substitution of parts other than factory authorized parts, unauthorized removal of any parts including legs, or unauthorized addition of any parts.

Continued on next page

Continued from previous page

- Equipment damage incurred as a direct result of poor water quality*, inadequate maintenance of steam generators and/or surfaces affected by water. Water quality and required maintenance of steam generating equipment is the responsibility of the owner/operator.
- Equipment damage incurred as a result of not following the required maintenance schedule published in the manuals for the equipment.

Conclusion

This warranty is exclusive and is in lieu of all other warranties, express or implied, including the implied warranties of merchantability and fitness for a particular purpose. No person except an officer of Alto-Shaam, Inc. is authorized to modify this warranty or to incur on behalf of Alto-Shaam any other obligation or liability in connection with Alto-Shaam equipment.

**Refer to the product spec sheet for water quality standards.*

This page intentionally left blank.

ALTO-SHAAM ASIA
Shanghai, China
Phone +86-21-6173 0336

ALTO-SHAAM CANADA
Concord, Ontario Canada
Toll Free Phone 866-577-4484
Phone +1-905-660-6781

ALTO-SHAAM CENTRAL & SOUTH AMERICA
Miami, FL USA
Phone +1-954-655-5727

ALTO-SHAAM MIDDLE EAST & AFRICA
Dubai, UAE
Phone +971 4 321 9712

ALTO-SHAAM MEXICO
Phone +52 1 477-717-3108

ALTO-SHAAM FRANCE, L.L.C.
Aix en Provence, France
Phone +33(0)4-88-78-21-73

ALTO-SHAAM GMBH
Bochum, Germany
Phone +49(0)234-298798-0

ALTO-SHAAM RUSSIA
Moscow, Russia
Phone +7-903-793-2331

ALTO-SHAAM

Menomonee Falls, WI 53052-0450, U.S.A.
Telephone 800-558-8744 | +1-262-251-3800 | alto-shaam.com